Lecture 5

2020/2021

Microwave Devices and Circuits for Radiocommunications

2020/2021

- 2C/1L, **MDCR**
- **Attendance at minimum 7 sessions (course + laboratory)**
- Lectures- **associate professor Radu Damian**
  - Wednesday 15-17, Online, Microsoft Teams
  - E – 50% final grade
  - **problems** + (2p atten. lect.) + (3 tests) + (bonus activity)
    - 3p=+0.5p
  - **all materials/equipments authorized**

2020/2021

- Laboratory – **associate professor Radu Damian**
  - Thursday **10-12**, II.13 / (**Online**)
  - L – 25% final grade
    - ADS, 4 sessions
    - Attendance + personal results
  - P – 25% final grade
    - ADS, 2 sessions (**-1**~25.02.2021)
    - personal homework

Materials

- RF-OPTO
  - **http://rf-opto.etti.tuiasi.ro**
- **David Pozar, "Microwave Engineering"**, Wiley; 4th edition , 2011
  - 1 exam problem ← Pozar
- Photos
  - sent by ~~email~~/online exam
  - used at lectures/laboratory

Profile photo

- Profile photo – online “exam”

Examene online: 2020/2021

Disciplina: MDC (Microwave Devices and Circuits (Engleza))

Pas 3

Nr.	Titlu	Start	Stop	Text
1	Profile photos	03/03/2021; 10:00	08/04/2021; 08:00	Online "exam" created f ..
2	Mini Test 1 (lecture 2)	03/03/2021; 15:35	03/03/2021; 15:50	The current test consis ..

Online

- access to **online exams** requires the **password** received by email

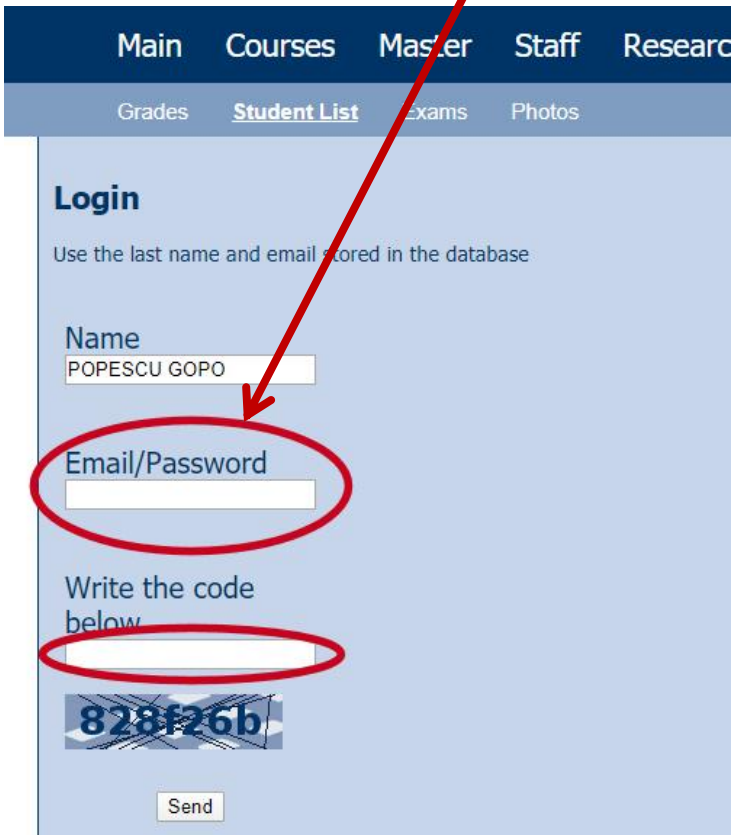

Online results submission

- many numerical values

Z1	Z2	Z3	Z4	Z5	Z6	Z7
148.33	155.88	202.12	164.35	180.91	30.29	185.19
26.97	153.5	34.64	35.79	55.56	26.212	10.693
0	0	0	0	0	0	0
50	50	50	50	50	50	50

√

✗

Online results submission

Grade = Quality of the work +

+ Quality of the submission

Important

The lossless line

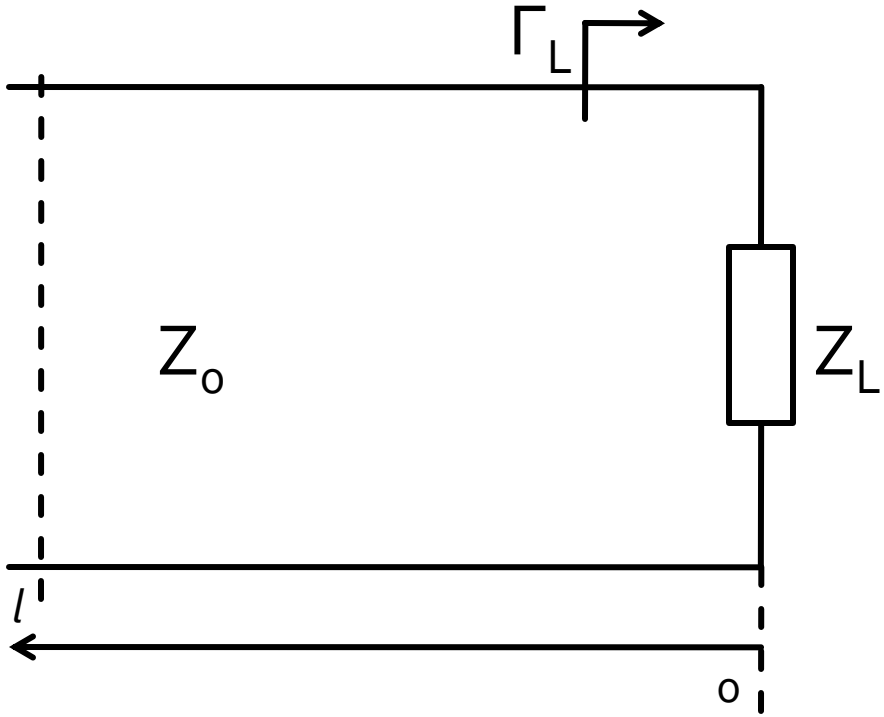

$$V(z) = V_0^+ e^{-j\cdot\beta\cdot z} + V_0^- e^{j\cdot\beta\cdot z}$$

$$I(z) = \frac{V_0^+}{Z_0} e^{-j\cdot\beta\cdot z} - \frac{V_0^-}{Z_0} e^{j\cdot\beta\cdot z}$$

$$Z_L = \frac{V(0)}{I(0)} \qquad Z_L = \frac{V_0^+ + V_0^-}{V_0^+ - V_0^-} \cdot Z_0$$

- voltage reflection coefficient

$$\boxed{\Gamma = \frac{V_0^-}{V_0^+} = \frac{Z_L - Z_0}{Z_L + Z_0}}$$

- Z_o real

The lossless line

$$V(z) = V_0^+ \cdot \left(e^{-j\cdot\beta\cdot z} + \Gamma \cdot e^{j\cdot\beta\cdot z}\right) \qquad I(z) = \frac{V_0^+}{Z_0} \cdot \left(e^{-j\cdot\beta\cdot z} - \Gamma \cdot e^{j\cdot\beta\cdot z}\right)$$

- time-average Power flow along the line

$$P_{avg} = \frac{1}{2} \cdot \mathrm{Re}\left\{V(z) \cdot I(z)^*\right\} = \frac{1}{2} \cdot \frac{\left|V_0^+\right|^2}{Z_0} \cdot \mathrm{Re}\left\{1 - \Gamma^* \cdot \underbrace{e^{-2j\cdot\beta\cdot z} + \Gamma \cdot e^{2j\cdot\beta\cdot z}}_{\left(z - z^*\right) = \mathrm{Im}} - \left|\Gamma\right|^2\right\}$$

$$P_{avg} = \frac{1}{2} \cdot \frac{\left|V_0^+\right|^2}{Z_0} \cdot \left(1 - \left|\Gamma\right|^2\right)$$

- Total power delivered to the load = Incident power – "Reflected" power
- Return "Loss" [dB] $\qquad \mathrm{RL} = -20 \cdot \log\left|\Gamma\right| \quad [\mathrm{dB}]$

Reflection and power / Model

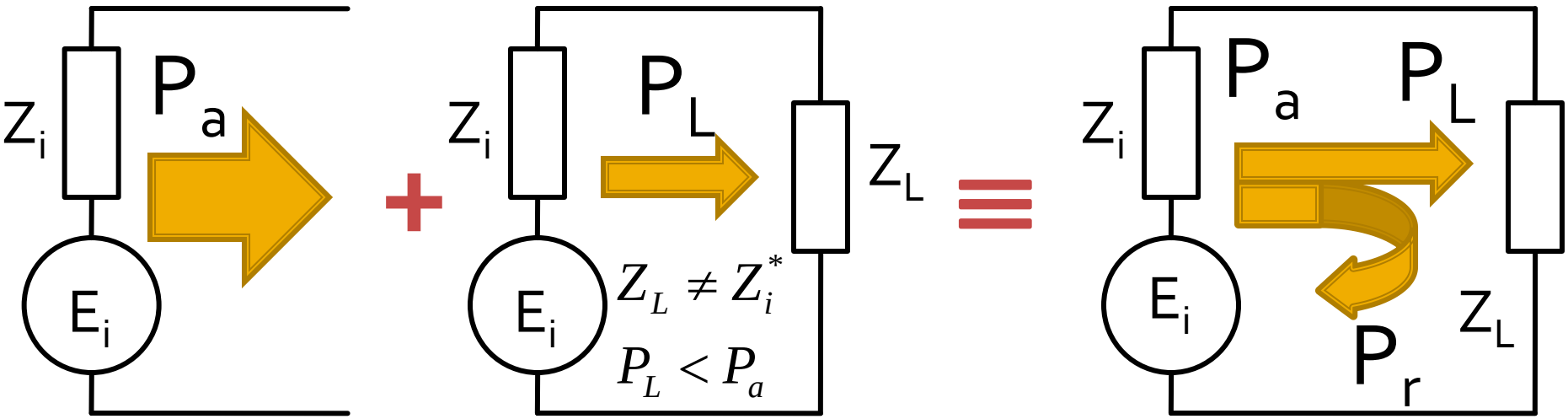

- The source has the ability to sent to the load a certain maximum power (available power) P_a
- For a particular load the power sent to the load is less than the maximum (mismatch) $P_L < P_a$
- The phenomenon is **"as if"** (model) some of the power is reflected $P_r = P_a - P_L$
- The power is a **scalar !**

Matching , from the point of view of power transmission

$$\boxed{Z_L = Z_i^*}$$

If we choose a real Zo

$$\Gamma = \frac{Z - Z_0}{Z + Z_0}$$

$$\boxed{\Gamma_L = \Gamma_i^*}$$

- complex numbers
- in the complex plane

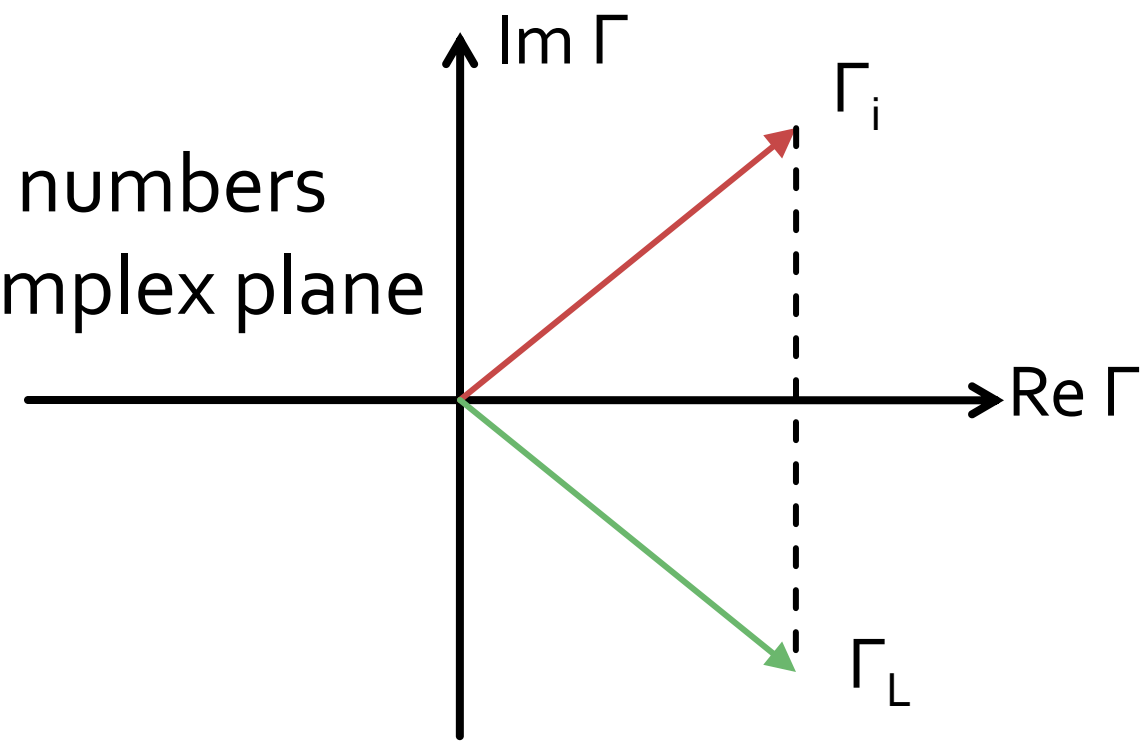

General theory

Microwave Network Analysis

Course Topics

- Transmission lines
- Impedance matching and tuning
- Directional couplers
- Power dividers
- Microwave amplifier design
- Microwave filters
- ~~Oscillators and mixers~~ ?

Network Analysis

- We try to separate a complex circuit into individual blocks
- These are analyzed separately (decoupled from the rest of the circuit) and are characterized only by the port level signals (**black box**)
- Network-level analysis allows you to put together individual block results and get a total result for the entire circuit

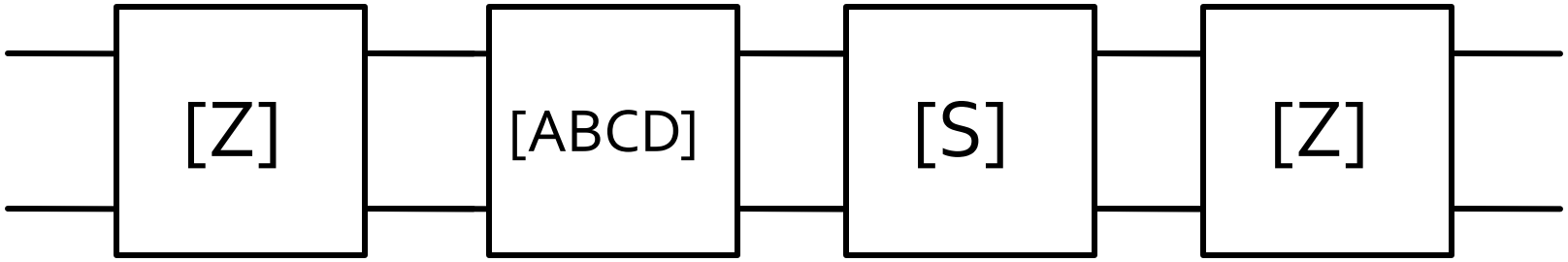

Impedance matrix – Z

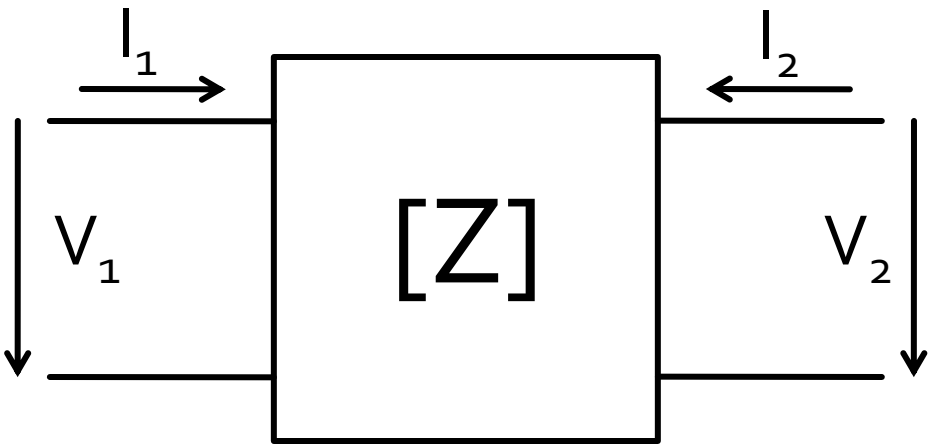

$$\begin{bmatrix} V_1 \\ V_2 \end{bmatrix} = \begin{bmatrix} Z_{11} & Z_{12} \\ Z_{21} & Z_{22} \end{bmatrix} \cdot \begin{bmatrix} I_1 \\ I_2 \end{bmatrix}$$

$$V_1 = Z_{11} \cdot I_1 + Z_{12} \cdot I_2$$

$$V_2 = Z_{21} \cdot I_1 + Z_{22} \cdot I_2$$

$$V_1 = Z_{11} \cdot I_1 \big|_{I_2=0} \qquad Z_{11} = \left.\frac{V_1}{I_1}\right|_{I_2=0}$$

- Z11 – input impedance with open-circuited output

$$Z_{11} = \left.\frac{V_1}{I_1}\right|_{I_2=0} \qquad Z_{12} = \left.\frac{V_1}{I_2}\right|_{I_1=0} \qquad Z_{21} = \left.\frac{V_2}{I_1}\right|_{I_2=0} \qquad Z_{22} = \left.\frac{V_2}{I_2}\right|_{I_1=0}$$

Admittance matrix – Y

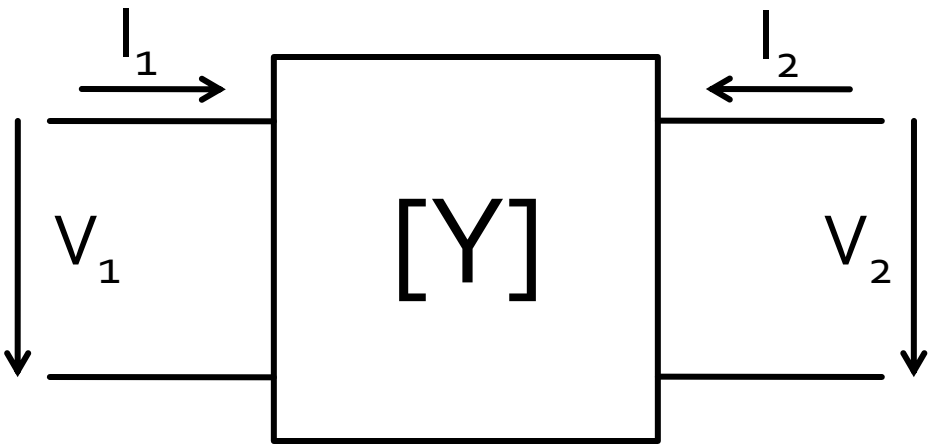

$$\begin{bmatrix} I_1 \\ I_2 \end{bmatrix} = \begin{bmatrix} Y_{11} & Y_{12} \\ Y_{21} & Y_{22} \end{bmatrix} \cdot \begin{bmatrix} V_1 \\ V_2 \end{bmatrix}$$

$$I_1 = Y_{11} \cdot V_1 + Y_{12} \cdot V_2$$

$$I_2 = Y_{21} \cdot V_1 + Y_{22} \cdot V_2$$

$$I_1 = Y_{11} \cdot V_1 \Big|_{V_2=0} \qquad Y_{11} = \frac{I_1}{V_1}\Bigg|_{V_2=0}$$

- Y11 – input admittance with short-circuited output

$$Y_{11} = \frac{I_1}{V_1}\Bigg|_{V_2=0} \qquad Y_{12} = \frac{I_1}{V_2}\Bigg|_{V_1=0} \qquad Y_{21} = \frac{I_2}{V_1}\Bigg|_{V_2=0} \qquad Y_{22} = \frac{I_2}{V_2}\Bigg|_{V_1=0}$$

Hybrid matrices – H and G

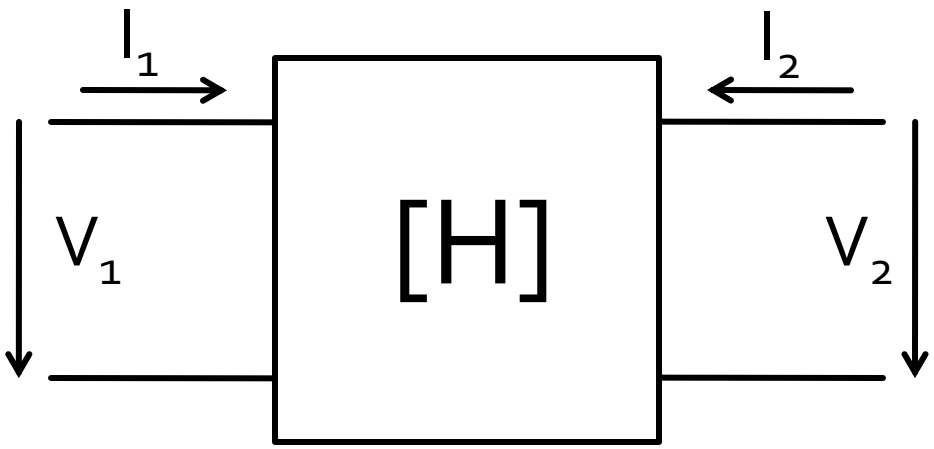

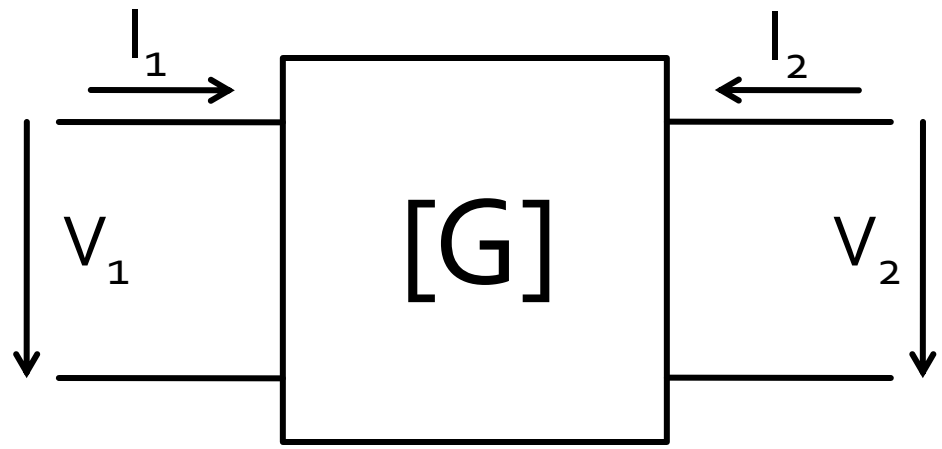

$$\begin{bmatrix} V_1 \\ I_2 \end{bmatrix} = \begin{bmatrix} H_{11} & H_{12} \\ H_{21} & H_{22} \end{bmatrix} \cdot \begin{bmatrix} I_1 \\ V_2 \end{bmatrix}$$

$$\begin{bmatrix} I_1 \\ V_2 \end{bmatrix} = \begin{bmatrix} G_{11} & G_{12} \\ G_{21} & G_{22} \end{bmatrix} \cdot \begin{bmatrix} V_1 \\ I_2 \end{bmatrix}$$

$$H_{21} = \left. \frac{I_2}{I_1} \right|_{V_2 = 0 \, or \, H_{22} \to \infty}$$

- h_{21E} widely used for Bipolar Transistors, common emitter topology (or β, h_{22E} >>)

Network Analysis

- Each matrix is best suited for a particular mode of port excitation (V, I)
  - matrix H in common emitter connection for TB: I_B, V_{CE}
  - matrices provide the associated quantities depending on the "attack" ones
- Traditional notation of Z, Y, G, H parameters is in lowercase (z, y, g, h)
- In microwave analysis we prefer the notation in uppercase to avoid confusion with the **normalized parameters**

$$z = \frac{Z}{Z_0} \qquad y = \frac{Y}{Y_0} = \frac{1/Z}{1/Z_0} = \frac{Z_0}{Z} = Z_0 \cdot Y$$

$$z_{11} = \frac{Z_{11}}{Z_0} \qquad y_{11} = \frac{Y_{11}}{Y_0} = Z_0 \cdot Y_{11}$$

ABCD (transmission) matrix

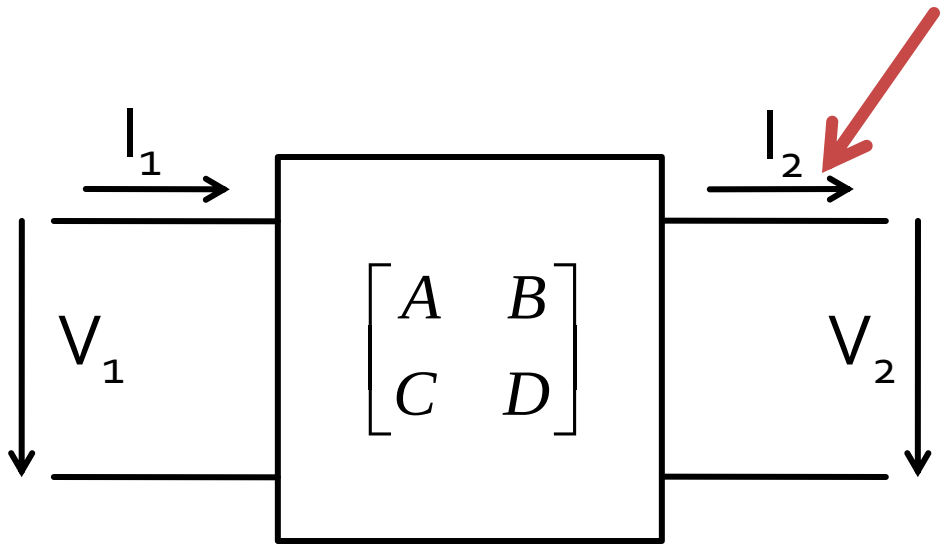

$$\begin{bmatrix} V_1 \\ I_1 \end{bmatrix} = \begin{bmatrix} A & B \\ C & D \end{bmatrix} \cdot \begin{bmatrix} V_2 \\ I_2 \end{bmatrix}$$

$$V_1 = A \cdot V_2 + B \cdot I_2$$

$$I_1 = C \cdot V_2 + D \cdot I_2$$

$$\begin{bmatrix} V_2 \\ I_2 \end{bmatrix} = \frac{1}{A \cdot D - B \cdot C} \cdot \begin{bmatrix} D & -B \\ -C & A \end{bmatrix} \cdot \begin{bmatrix} V_1 \\ I_1 \end{bmatrix}$$

$$A = \left.\frac{V_1}{V_2}\right|_{I_2=0} \qquad B = \left.\frac{V_1}{I_2}\right|_{V_2=0} \qquad C = \left.\frac{I_1}{V_2}\right|_{I_2=0} \qquad D = \left.\frac{I_1}{I_2}\right|_{V_2=0}$$

ABCD (transmission) matrix

- This 2X2 matrix characterizes the "input"/"output" relation
- Allows easy chaining of multiple two-ports

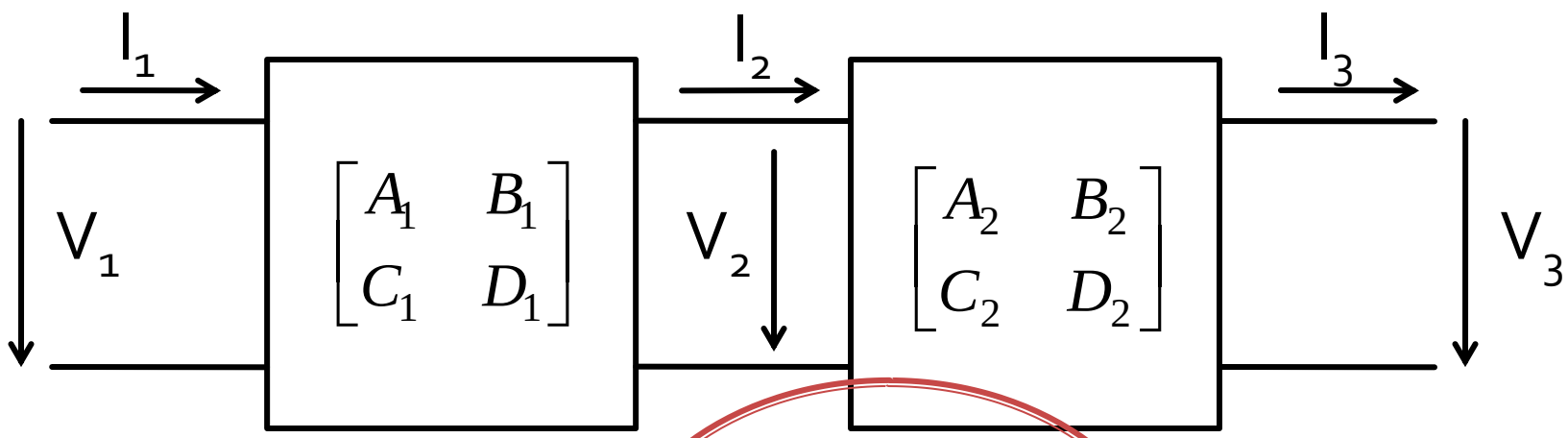

$$\begin{bmatrix} V_1 \\ I_1 \end{bmatrix} = \begin{bmatrix} A_1 & B_1 \\ C_1 & D_1 \end{bmatrix} \cdot \begin{bmatrix} V_2 \\ I_2 \end{bmatrix} = \begin{bmatrix} A_1 & B_1 \\ C_1 & D_1 \end{bmatrix} \cdot \begin{bmatrix} A_2 & B_2 \\ C_2 & D_2 \end{bmatrix} \cdot \begin{bmatrix} V_3 \\ I_3 \end{bmatrix}$$

ABCD (transmission) matrix

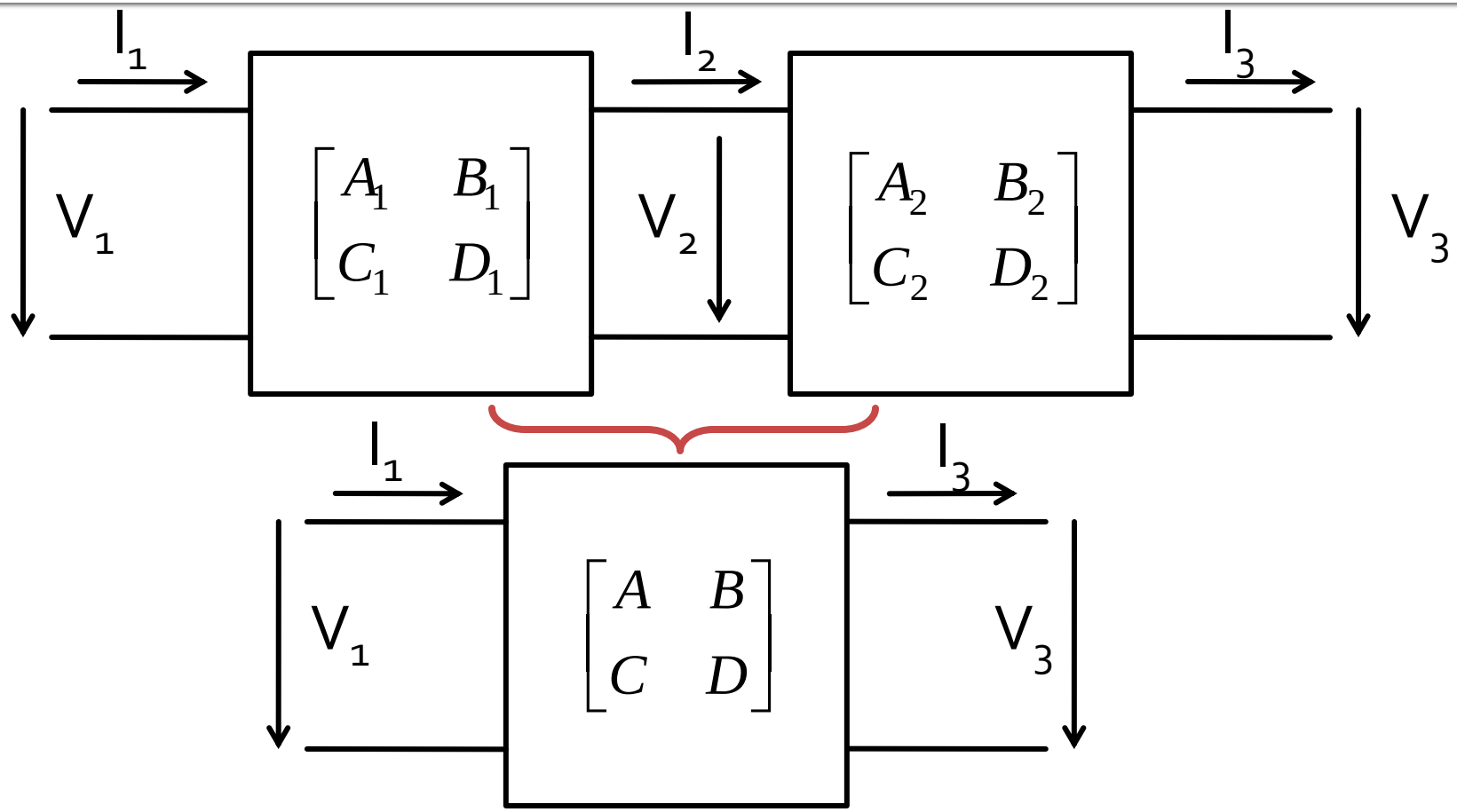

$$\begin{bmatrix} A & B \\ C & D \end{bmatrix} = \begin{bmatrix} A_1 & B_1 \\ C_1 & D_1 \end{bmatrix} \cdot \begin{bmatrix} A_2 & B_2 \\ C_2 & D_2 \end{bmatrix}$$

ABCD (transmission) matrix

- suitable **only** for two-port networks (Z, Y can be easily extended for multiport / n-ports)
- allows easy coupling of multiple elements
- allows the calculation of complex circuits with one input and one output by breaking them in individual component blocks
- a library of ABCD matrices for elementary two-port networks can be built up

Library of ABCD matrices

- Series impedance

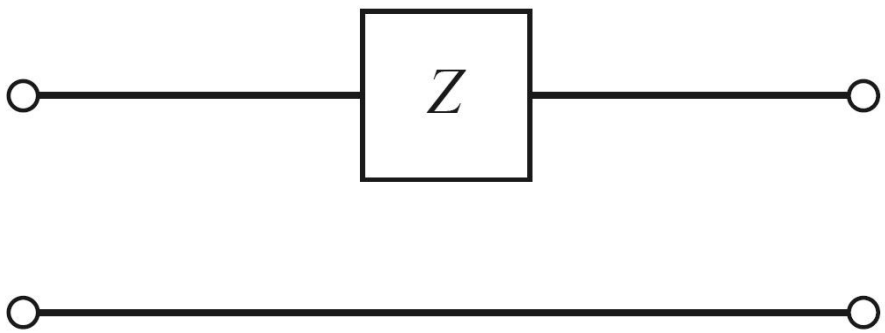

$$A = 1 \qquad B = Z$$
$$C = 0 \qquad D = 1$$

$$\begin{bmatrix} 1 & Z \\ 0 & 1 \end{bmatrix}$$

$$A = \left.\frac{V_1}{V_2}\right|_{I_2=0} = 1 \qquad B = \left.\frac{V_1}{I_2}\right|_{V_2=0} = \frac{V_1}{V_1/Z} = Z$$

$$C = \left.\frac{I_1}{V_2}\right|_{I_2=0} = 0 \qquad D = \left.\frac{I_1}{I_2}\right|_{V_2=0} = \frac{I_1}{I_1} = 1$$

Library of ABCD matrices

- Shunt admittance

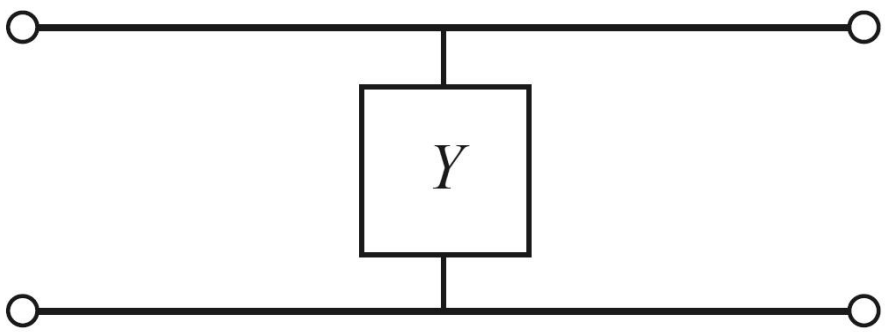

$$A = 1 \qquad B = 0$$

$$C = Y \qquad D = 1$$

$$\begin{bmatrix} 1 & 0 \\ Y & 1 \end{bmatrix}$$

Homework!

Library of ABCD matrices

- Transmission line

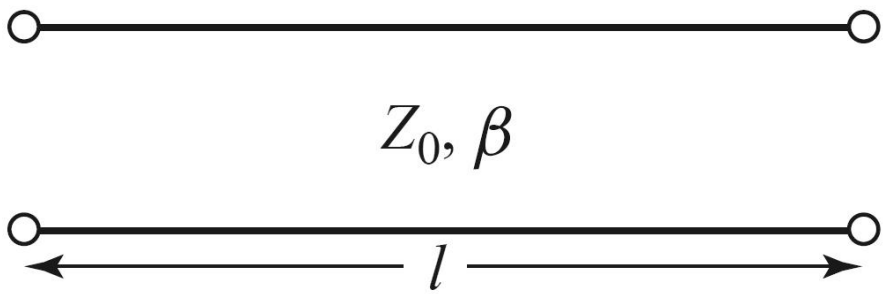

$$A = \cos\beta \cdot l$$

$$B = j \cdot Z_0 \cdot \sin\beta \cdot l$$

$$C = j \cdot Y_0 \cdot \sin\beta \cdot l$$

$$D = \cos\beta \cdot l$$

$$\begin{bmatrix} \cos\beta \cdot l & j \cdot Z_0 \cdot \sin\beta \cdot l \\ j \cdot Y_0 \cdot \sin\beta \cdot l & \cos\beta \cdot l \end{bmatrix}$$

Homework!

$$Z_{in} = Z_0 \cdot \frac{Z_L + j \cdot Z_0 \cdot \tan\beta \cdot l}{Z_0 + j \cdot Z_L \cdot \tan\beta \cdot l}$$

Library of ABCD matrices

- Transformer

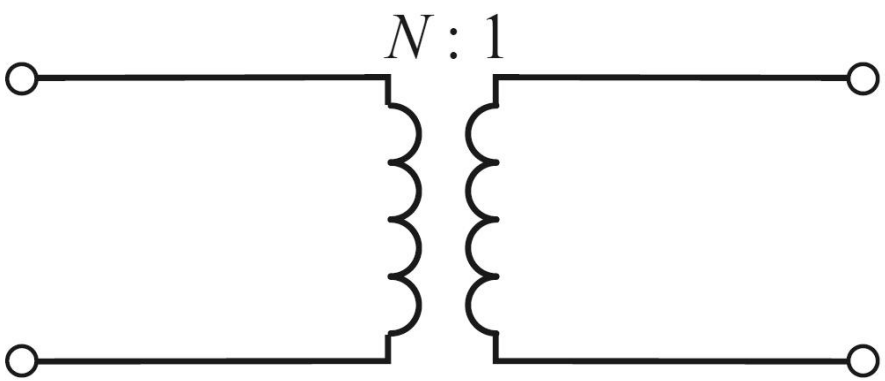

$$A = N \qquad B = 0$$

$$C = 0 \qquad D = \frac{1}{N}$$

$$\begin{bmatrix} N & 0 \\ 0 & \frac{1}{N} \end{bmatrix}$$

Homework!

Library of ABCD matrices

- π network

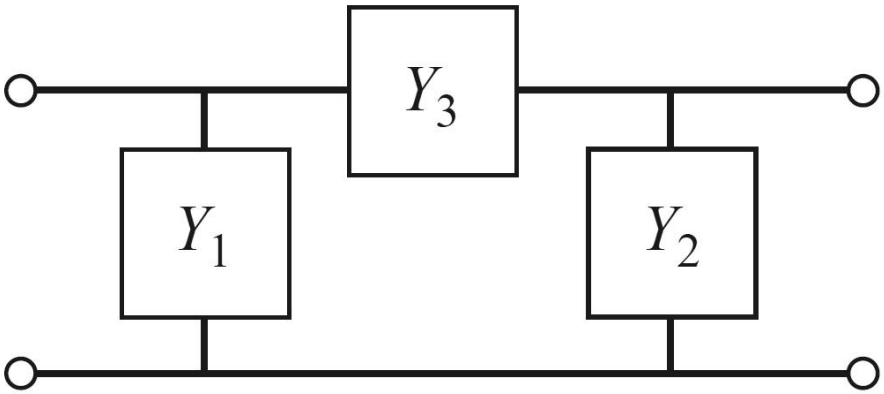

$$A = 1 + \frac{Y_2}{Y_3}$$

$$B = \frac{1}{Y_3}$$

$$C = Y_1 + Y_2 + \frac{Y_1 \cdot Y_2}{Y_3}$$

$$D = 1 + \frac{Y_1}{Y_3}$$

Homework!

Library of ABCD matrices

- T network

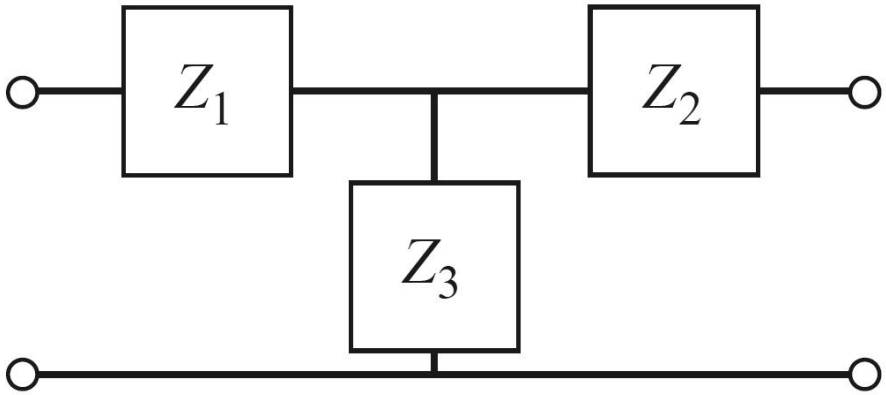

$$A = 1 + \frac{Z_1}{Z_3}$$

$$B = Z_1 + Z_2 + \frac{Z_1 \cdot Z_2}{Z_3}$$

$$C = \frac{1}{Z_3}$$

$$D = 1 + \frac{Z_2}{Z_3}$$

Homework!

Example for ABCD matrix

- Find the voltage V_L across the load resistor in the circuit shown below (Pozar/exam problem)

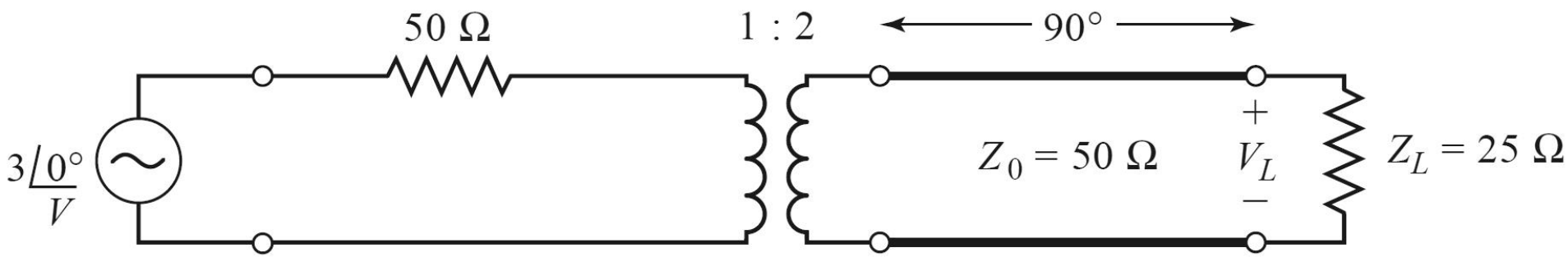

Example for ABCD matrix

- We break the circuit in elementary sections
- Sources are left outside
- If necessary, input and output ports are created (and left open-circuited)

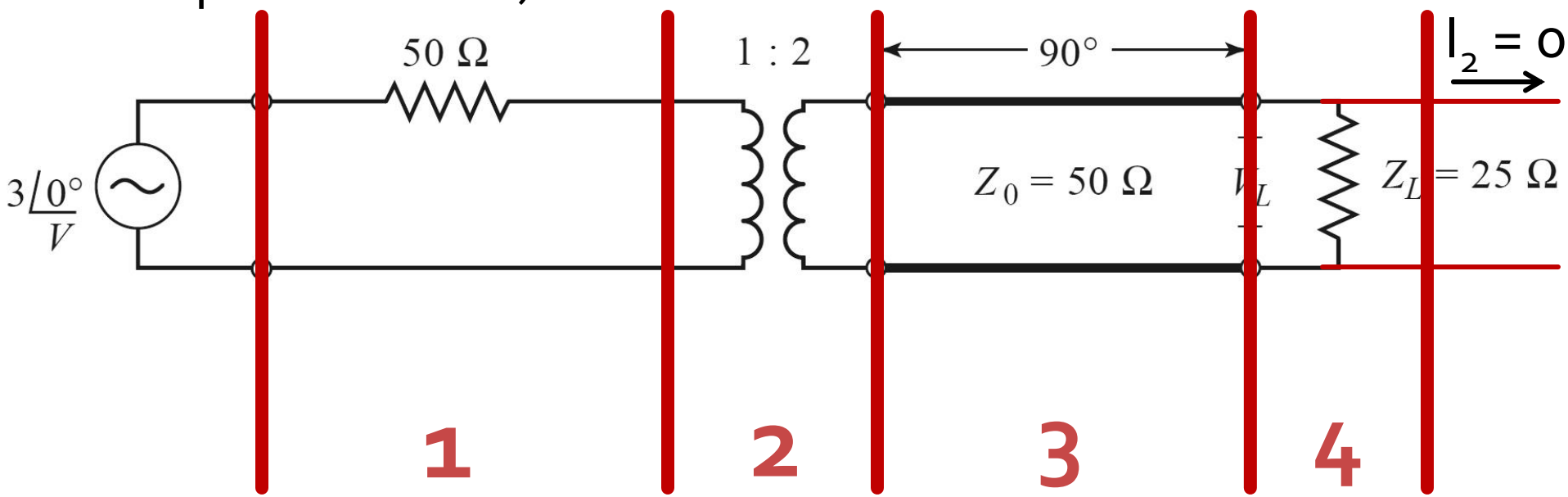

$$\begin{bmatrix} A & B \\ C & D \end{bmatrix} = M_1 \cdot M_2 \cdot M_3 \cdot M_4 \qquad V_1 = A \cdot V_2 + B \cdot I_2 \big|_{I_2=0} \qquad V = A \cdot V_L \rightarrow V_L = \frac{V}{A}$$

Example for ABCD matrix

- M_1 , series impedance

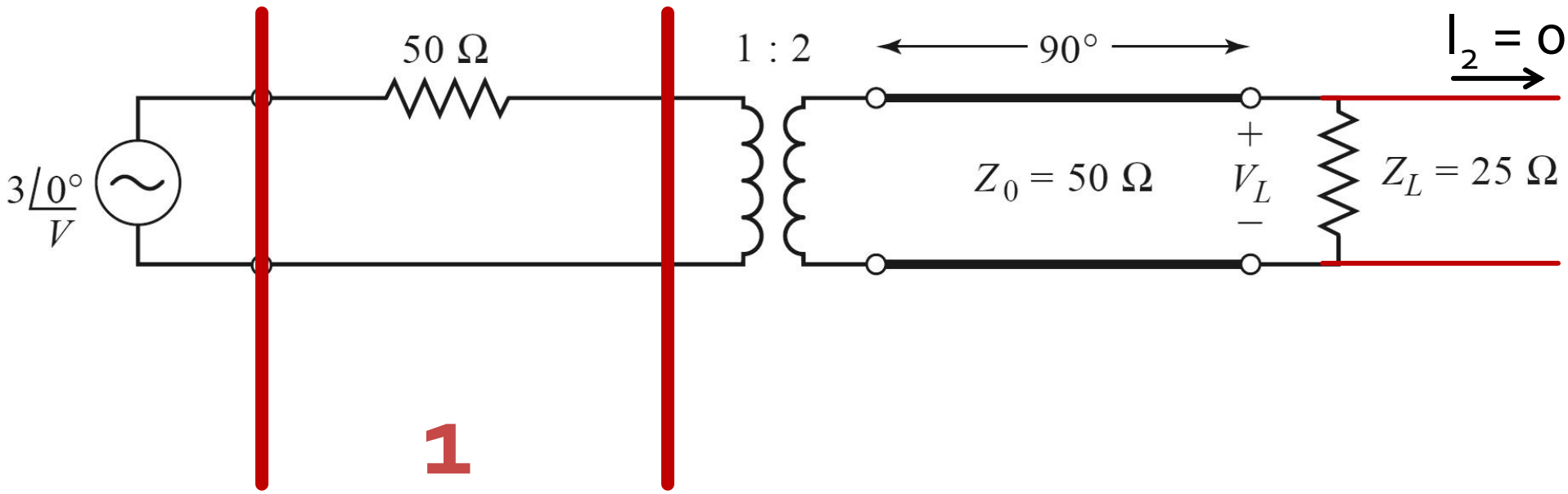

$$M_1 = \begin{bmatrix} A & B \\ C & D \end{bmatrix} = \begin{bmatrix} 1 & 50 \\ 0 & 1 \end{bmatrix}$$

Example for ABCD matrix

- M_2 , 1:2 transformer

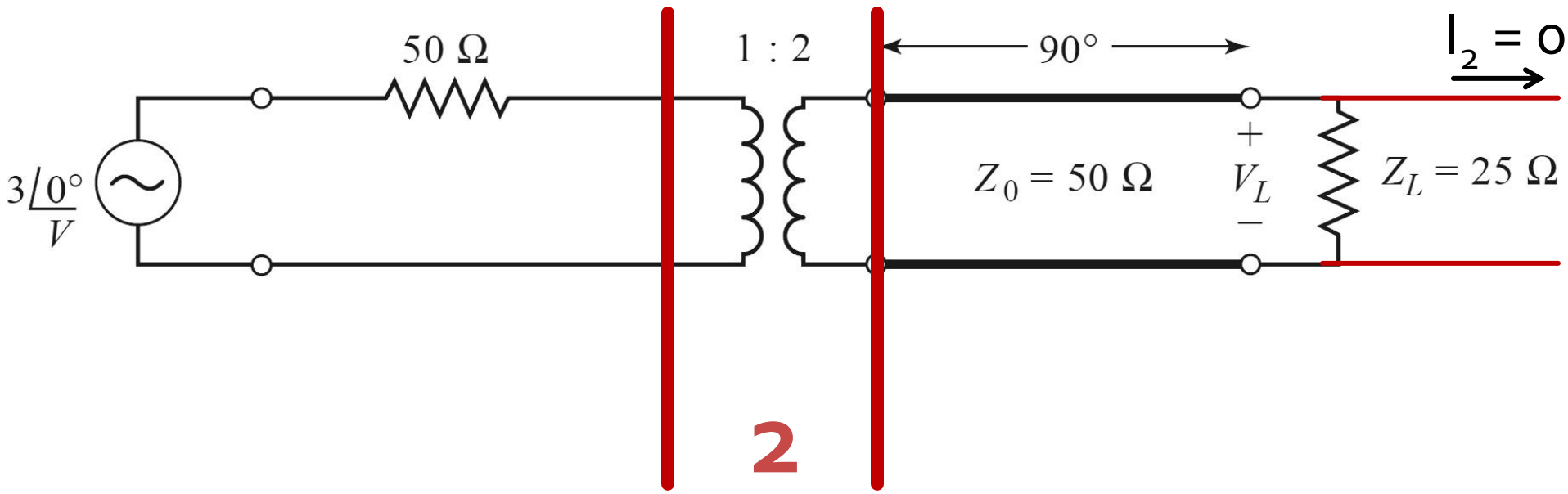

$$M_2 = \begin{bmatrix} A & B \\ C & D \end{bmatrix} = \begin{bmatrix} 1/2 & 0 \\ 0 & 2 \end{bmatrix}$$

Example for ABCD matrix

- M_3 , series transmission line, E = 90°

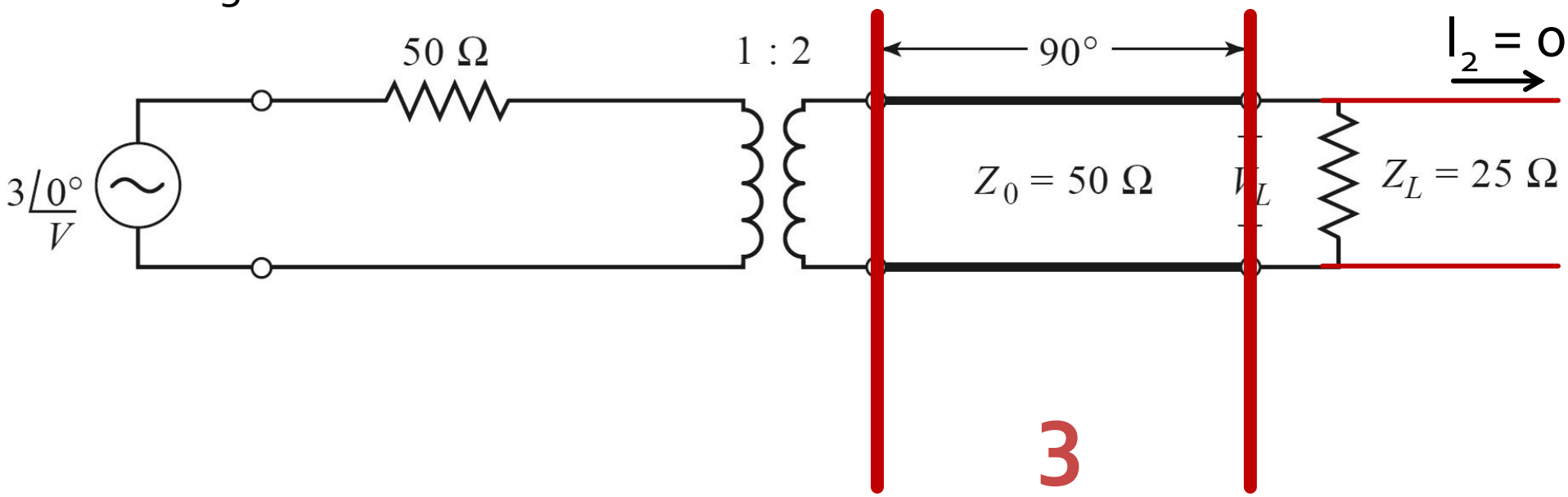

$$M_3 = \begin{bmatrix} A & B \\ C & D \end{bmatrix} = \begin{bmatrix} 0 & 50 \cdot j \\ \frac{j}{50} & 0 \end{bmatrix}$$

Example for ABCD matrix

- M_4 , shunt impedance/admittance

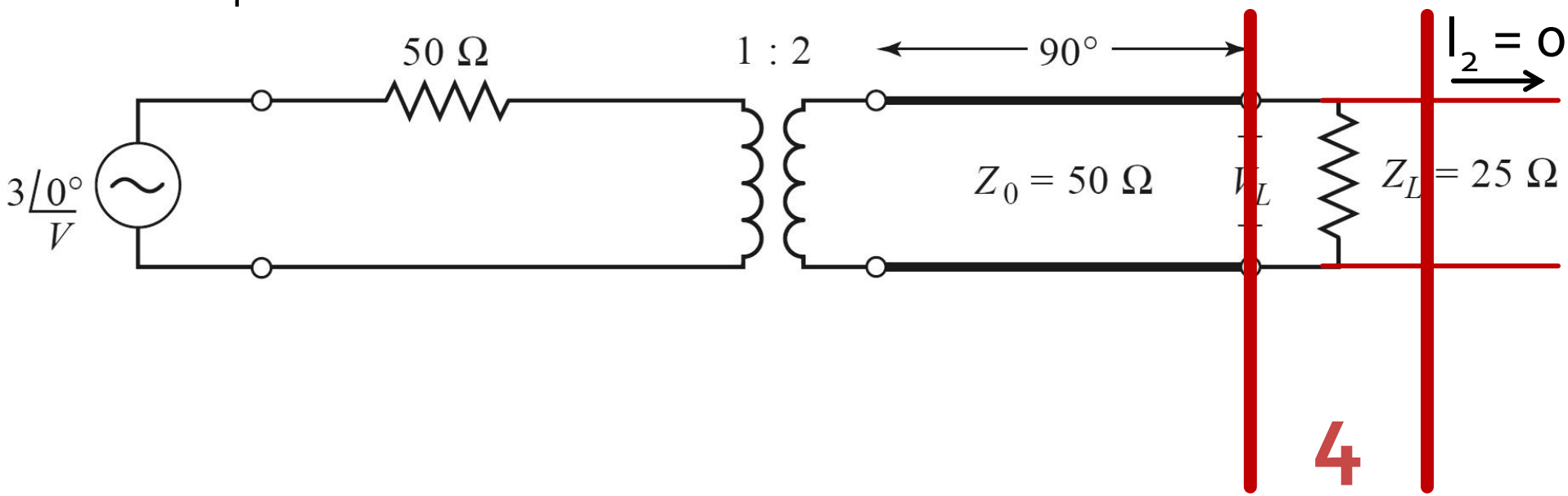

$$M_4 = \begin{bmatrix} A & B \\ C & D \end{bmatrix} = \begin{bmatrix} 1 & 0 \\ \frac{1}{25} & 1 \end{bmatrix}$$

Example for ABCD matrix

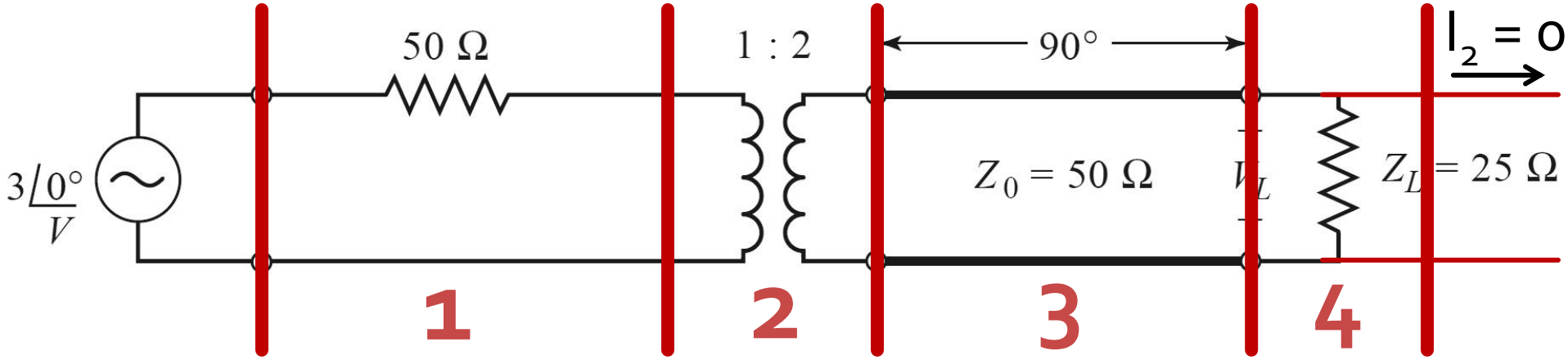

$$\begin{bmatrix} A & B \\ C & D \end{bmatrix} = \begin{bmatrix} 1 & 50 \\ 0 & 1 \end{bmatrix} \cdot \begin{bmatrix} \frac{1}{2} & 0 \\ 0 & 2 \end{bmatrix} \cdot \begin{bmatrix} 0 & 50 \cdot j \\ \frac{j}{50} & 0 \end{bmatrix} \cdot \begin{bmatrix} 1 & 0 \\ \frac{1}{25} & 1 \end{bmatrix} = \begin{bmatrix} 3 \cdot j & 25 \cdot j \\ \frac{j}{25} & 0 \end{bmatrix}$$

$$V_L = \frac{V}{A} = \frac{3\angle 0°}{3 \cdot j} = 1\angle -90°$$

(Somewhat!) Specific theory

Microwave Network Analysis

Scattering matrix – S

- Scattering parameters

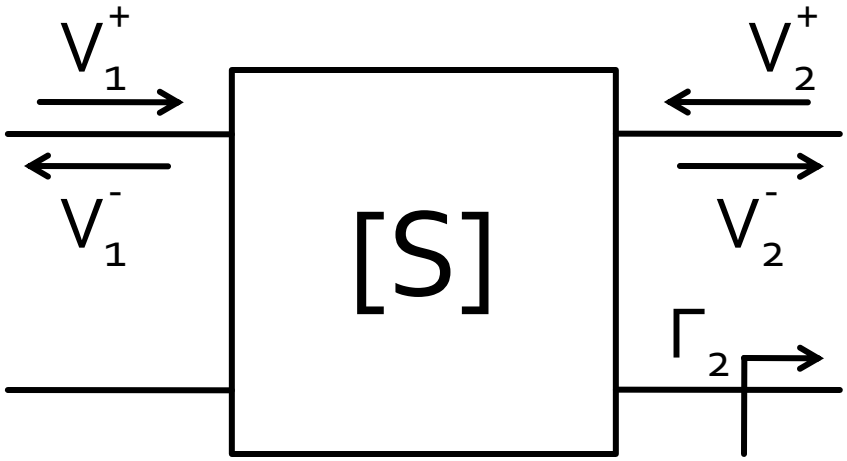

$$\begin{bmatrix} V_1^- \\ V_2^- \end{bmatrix} = \begin{bmatrix} S_{11} & S_{12} \\ S_{21} & S_{22} \end{bmatrix} \cdot \begin{bmatrix} V_1^+ \\ V_2^+ \end{bmatrix}$$

$$S_{11} = \left.\frac{V_1^-}{V_1^+}\right|_{V_2^+=0} \qquad S_{21} = \left.\frac{V_2^-}{V_1^+}\right|_{V_2^+=0}$$

- $V_2^+ = 0$ meaning: port 2 is terminated in matched load to avoid reflections towards the port

$$\Gamma_2 = 0 \rightarrow V_2^+ = 0$$

Scattering matrix – S

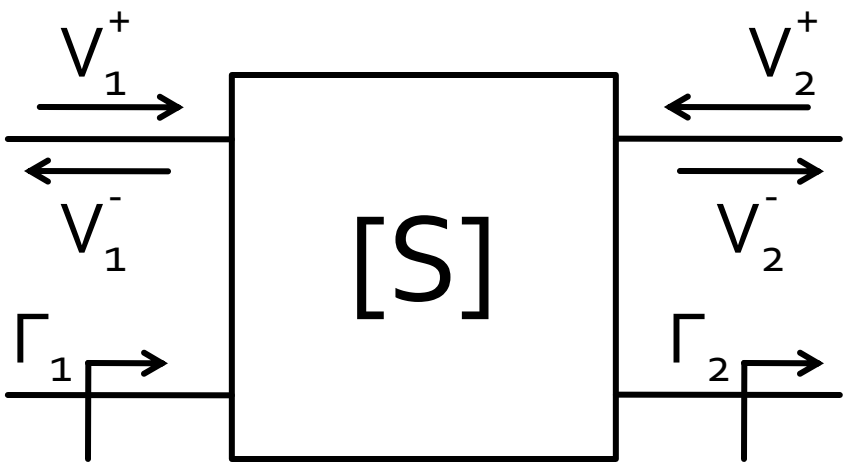

$$\begin{bmatrix} V_1^- \\ V_2^- \end{bmatrix} = \begin{bmatrix} S_{11} & S_{12} \\ S_{21} & S_{22} \end{bmatrix} \cdot \begin{bmatrix} V_1^+ \\ V_2^+ \end{bmatrix}$$

$$S_{11} = \left.\frac{V_1^-}{V_1^+}\right|_{V_2^+=0} = \Gamma_1\big|_{\Gamma_2=0}$$

$$S_{21} = \left.\frac{V_2^-}{V_1^+}\right|_{V_2^+=0} = T_{21}\big|_{\Gamma_2=0}$$

- S11 is the reflection coefficient seen looking into port ***1*** when port ***2*** is terminated in matched load
- S21 is the transmission coefficient from port ***1*** (**second** index**!**) to port ***2*** (**first** index**!**) when port ***2*** is terminated in matched load

Scattering matrix – S

- S matrix can be extended to multiple ports

$$S_{ii} = \left.\frac{V_i^-}{V_i^+}\right|_{V_k^+=0,\forall k\neq i} \qquad S_{ij} = \left.\frac{V_i^-}{V_j^+}\right|_{V_k^+=0,\forall k\neq j}$$

  - S_{ii} is the reflection coefficient seen looking into port ***i*** when all other ports are terminated in matched loads
  - S_{ij} is the transmission coefficient from port ***j*** (**second** index**!**) to port ***i*** (**first** index**!**) when all other ports are terminated in matched loads

Properties of S matrix

- If port *i* is connected to a transmission line with charateristic impedance Z_{oi}

$$[Z_0]=\begin{bmatrix} Z_{01} & \cdots & 0 \\ \vdots & \ddots & \vdots \\ 0 & \cdots & Z_{0n} \end{bmatrix}$$

- Lecture 3

$$V(z)=V_0^+ e^{-j\cdot\beta\cdot z}+V_0^- e^{j\cdot\beta\cdot z} \qquad I(z)=\frac{V_0^+}{Z_0}e^{-j\cdot\beta\cdot z}-\frac{V_0^-}{Z_0}e^{j\cdot\beta\cdot z}$$

In the port's reference plane, z=o

$$V_i=V_i^+ + V_i^- \qquad I_i=\frac{V_i^+}{Z_{0i}}-\frac{V_i^-}{Z_{0i}}$$

- Relation to Z matrix

$$[Z]\cdot[I]=[V]$$

$$[Z]\cdot[I]=[Z_0]^{-1}\cdot[Z]\cdot[V^+]-[Z_0]^{-1}\cdot[Z]\cdot[V^-] \qquad [V]=[V^+]+[V^-]$$

$$[Z_0]^{-1}\cdot[Z]\cdot[V^+]-[Z_0]^{-1}\cdot[Z]\cdot[V^-]=[V^+]+[V^-] \qquad ([Z]-[Z_0])\cdot[V^+]=([Z]+[Z_0])\cdot[V^-]$$

$$[V^-]=[S]\cdot[V^+] \qquad \boxed{[S]=([Z]-[Z_0])\cdot([Z]+[Z_0])^{-1}}$$

A Shift in Reference Planes

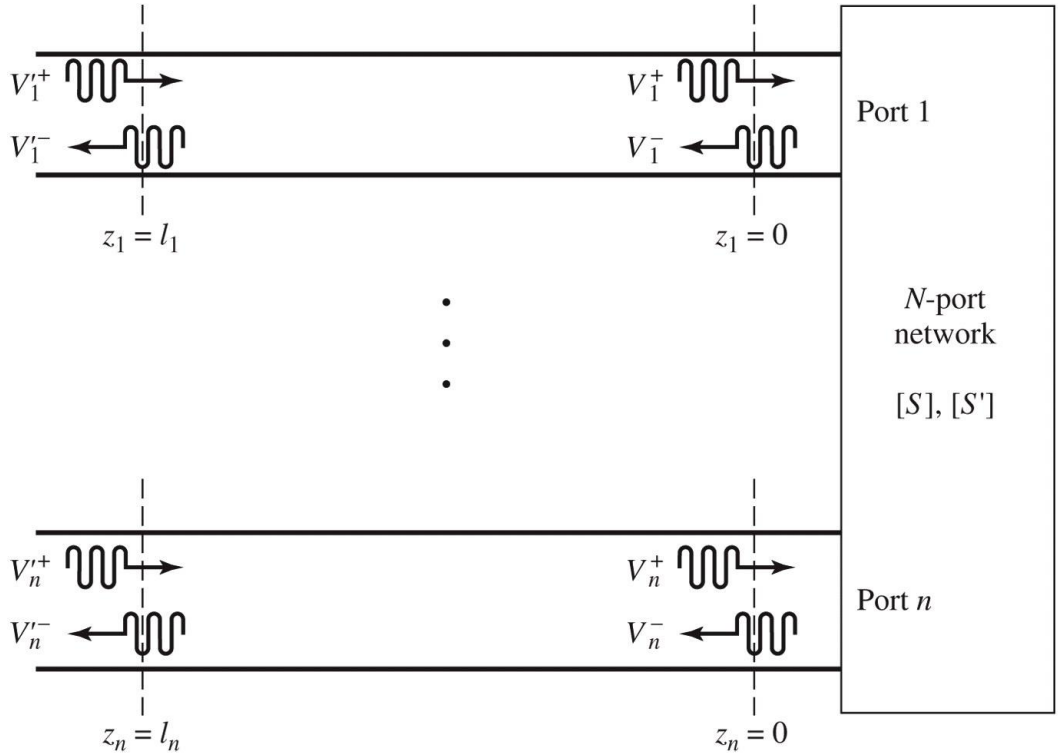

Figure 4.9
© John Wiley & Sons, Inc. All rights reserved.

- De-Embedding

$$[S'] = \begin{bmatrix} e^{-j\cdot\theta_1} & 0 & \cdots & 0 \\ 0 & e^{-j\cdot\theta_2} & 0 & 0 \\ \vdots & \vdots & \ddots & \vdots \\ 0 & \cdots & \cdots & e^{-j\cdot\theta_N} \end{bmatrix} \cdot [S] \cdot \begin{bmatrix} e^{-j\cdot\theta_1} & 0 & \cdots & 0 \\ 0 & e^{-j\cdot\theta_2} & 0 & 0 \\ \vdots & \vdots & \ddots & \vdots \\ 0 & \cdots & \cdots & e^{-j\cdot\theta_N} \end{bmatrix}$$

Properties of S matrix (Z,Y)

- Reciprocal networks (no active circuits, no ferrites)

$$Z_{ij} = Z_{ji}, \forall j \neq i$$

$$Y_{ij} = Y_{ji}, \forall j \neq i$$

$$S_{ij} = S_{ji}, \forall j \neq i \qquad \boxed{[S] = [S]^t}$$

- Lossless networks

$$\mathrm{Re}\{Z_{ij}\} = 0, \forall i, j$$

$$\mathrm{Re}\{Y_{ij}\} = 0, \forall i, j$$

$$\sum_{k=1}^{N} S_{ki} \cdot S_{kj}^* = \delta_{ij}, \forall i, j$$

$$\boxed{[S]^* \cdot [S]^t = [1]}$$

$$\sum_{k=1}^{N} S_{ki} \cdot S_{ki}^* = 1$$

$$\sum_{k=1}^{N} S_{ki} \cdot S_{kj}^* = 0, \forall i \neq j$$

Generalized Scattering Parameters

- The total voltage and current on a transmission line in terms of the incident and reflected voltage wave amplitudes

$$V = V_0^+ + V_0^- \qquad I = \frac{1}{Z_0}\cdot\left(V_0^+ - V_0^-\right)$$

In the port's reference plane, z=o

- We find the incident and reflected voltage wave amplitudes

$$V_0^+ = \frac{V + Z_0 \cdot I}{2} \qquad V_0^- = \frac{V - Z_0 \cdot I}{2}$$

- The average power delivered to a load :

$$P_L = \frac{1}{2}\cdot \mathrm{Re}\left\{V \cdot I^*\right\} = \frac{1}{2\cdot Z_0}\cdot \mathrm{Re}\left\{\left|V_0^+\right|^2 - \underbrace{V_0^+ \cdot V_0^{-*} + V_0^{+*}}_{\left(z - z^*\right) = \mathrm{Im}} \cdot V_0^- - \left|V_0^-\right|^2\right\}$$

$$P_L = \frac{1}{2\cdot Z_0}\cdot\left(\left|V_0^+\right|^2 - \left|V_0^-\right|^2\right)$$

Generalized Scattering Parameters

- The average power delivered to a load:

$$P_L = \frac{1}{2 \cdot Z_0} \cdot \left(\left| V_0^+ \right|^2 - \left| V_0^- \right|^2 \right)$$

- Restrictions
  - Result valid for Zo real
  - Requires the presence of a line with characteristic impedance Zo between the source and the load

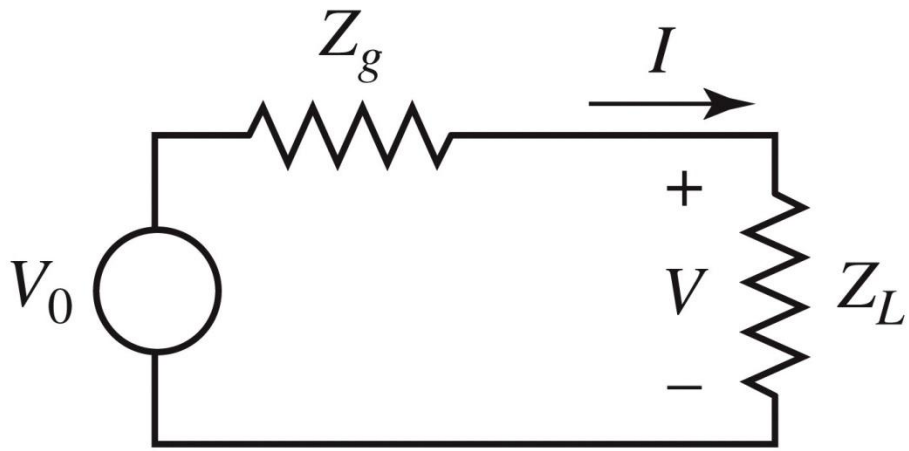

Figure 4.10
© John Wiley & Sons, Inc. All rights reserved.

Generalized Scattering Parameters

- We define the power wave amplitudes a and b

$$a = \frac{V + Z_R \cdot I}{2 \cdot \sqrt{R_R}}$$ the incident power wave

$$Z_R = R_R + j \cdot X_R$$

Any complex impedance, named reference impedance

$$b = \frac{V - Z_R^* \cdot I}{2 \cdot \sqrt{R_R}}$$ the reflected power wave

- Total voltage and current in terms of the power wave amplitudes

$$V = \frac{Z_R^* \cdot a + Z_R \cdot b}{\sqrt{R_R}}$$

$$I = \frac{a - b}{\sqrt{R_R}}$$

Reflection and power / Model – L4

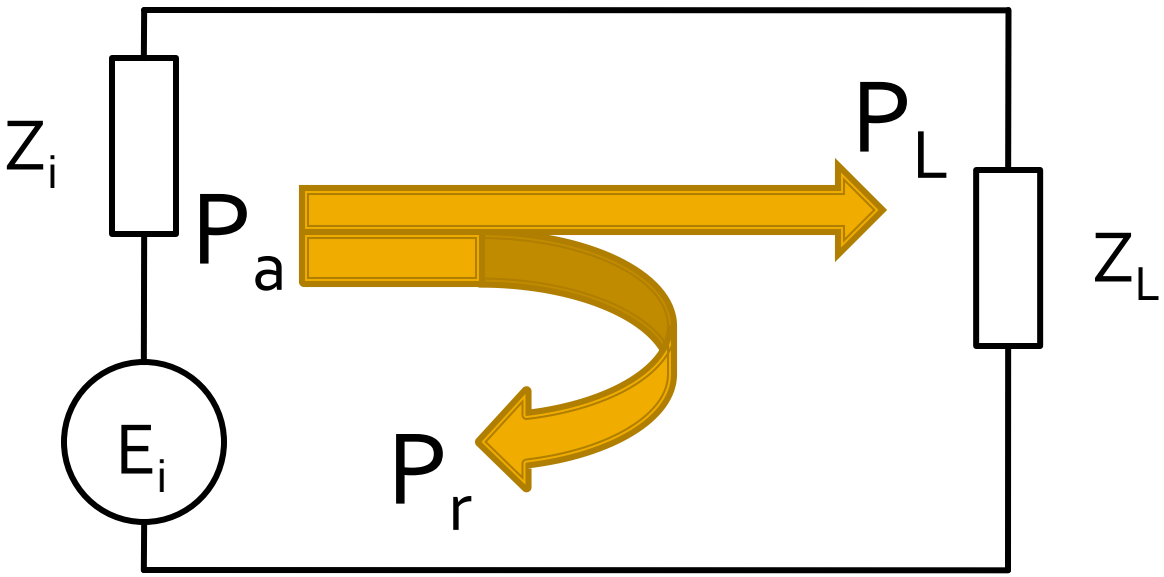

$$P_a = \frac{|E_i|^2}{4R_i}$$

$$P_L = \frac{R_L \cdot |E_i|^2}{(R_i + R_L)^2 + (X_i + X_L)^2}$$

$$\Gamma_L = \frac{Z_L - Z_0^*}{Z_L + Z_0}$$

$$P_r = \frac{|E_i|^2}{4R_i} \cdot \left[\frac{(R_i - R_L)^2 + (X_i + X_L)^2}{(R_i + R_L)^2 + (X_i + X_L)^2} \right] = P_a \cdot |\Gamma|^2$$

- Γ, power reflection coefficient

Power waves

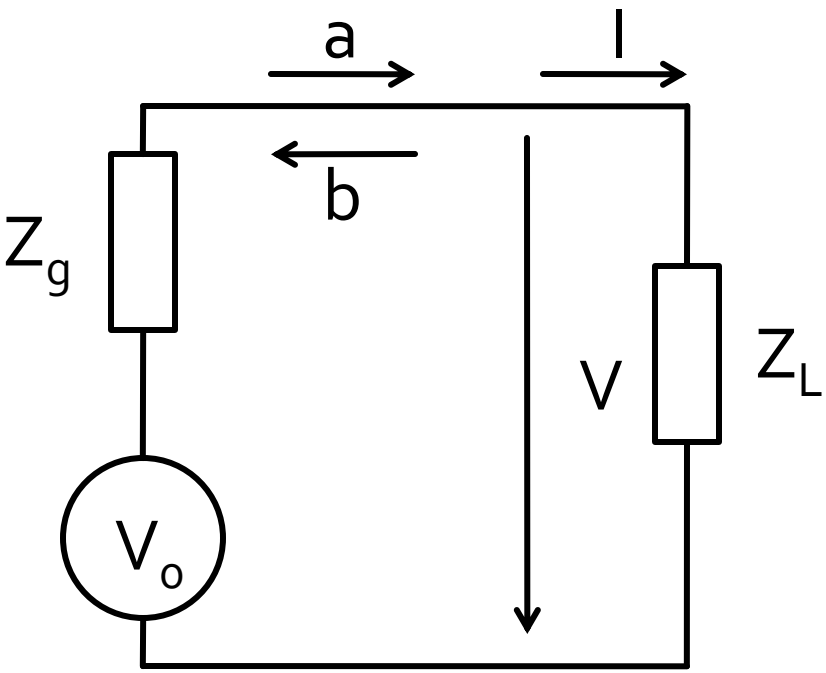

$$P_L = \frac{1}{2} \cdot \mathrm{Re}\left\{ V \cdot I^* \right\}$$

$$P_L = \frac{1}{2} \cdot \mathrm{Re}\left\{ \frac{Z_R^* \cdot a + Z_R \cdot b}{\sqrt{R_R}} \cdot \left(\frac{a-b}{\sqrt{R_R}} \right)^* \right\}$$

$$P_L = \frac{1}{2R_R} \cdot \mathrm{Re}\left\{ Z_R^* \cdot |a|^2 - Z_R^* \cdot a \cdot b^* + Z_R \cdot a^* \cdot b - Z_R \cdot |b|^2 \right\}$$

$$\left(z - z^*\right) = \mathrm{Im}$$

$$P_L = \frac{1}{2} \cdot |a|^2 - \frac{1}{2} \cdot |b|^2$$

$$\boxed{\forall Z_R \in C}$$

$$\Gamma_p = \frac{b}{a} = \frac{V - Z_R^* \cdot I}{V + Z_R \cdot I} = \frac{Z_L - Z_R^*}{Z_L + Z_R}$$

Power waves

$$V = \frac{V_0 \cdot Z_L}{Z_g + Z_L} \qquad I = \frac{V_0}{Z_g + Z_L} \qquad P_L = \frac{V_0^2}{2} \cdot \frac{R_L}{\left|Z_g + Z_L\right|^2}$$

- If we choose $Z_R = Z_L^*$

$$a = \frac{V + Z_R \cdot I}{2 \cdot \sqrt{R_R}} = V_0 \cdot \frac{\dfrac{Z_L}{Z_g + Z_L} + \dfrac{Z_L^*}{Z_g + Z_L}}{2 \cdot \sqrt{R_L}} = V_0 \cdot \frac{\sqrt{R_L}}{Z_g + Z_L}$$

$$b = \frac{V - Z_R^* \cdot I}{2 \cdot \sqrt{R_R}} = V_0 \cdot \frac{\dfrac{Z_L}{Z_g + Z_L} - \dfrac{Z_L}{Z_g + Z_L}}{2 \cdot \sqrt{R_L}} = 0$$

$$P_L = \frac{1}{2} \cdot |a|^2 = \frac{V_0^2}{2} \cdot \frac{R_L}{\left|Z_g + Z_L\right|^2}$$

Power waves

- When the load is conjugately matched to the generator

$$Z_g = Z_L^* \qquad P_{L\max} = \frac{1}{2}\cdot|a|^2 = \frac{V_0^2}{8\cdot R_L}$$

- Power reflection: L4

$$Z_L = Z_i^* \qquad P_{L\max} \equiv P_a \qquad \Gamma = \frac{Z - Z_0^*}{Z + Z_0}$$

$$Z_L \neq Z_i^* \qquad P_r = P_a\cdot|\Gamma|^2 \qquad P_L = P_a - P_r = P_a - P_a\cdot|\Gamma|^2 = P_a\cdot\left(1-|\Gamma|^2\right)$$

- Power reflection: L5

$$P_{L\max} \equiv P_a = \frac{1}{2}\cdot|a|^2 \qquad P_L = \frac{1}{2}\cdot|a|^2 - \frac{1}{2}\cdot|b|^2 \qquad \Gamma_p = \frac{b}{a} = \frac{V - Z_R^*\cdot I}{V + Z_R\cdot I} = \frac{Z_L - Z_R^*}{Z_L + Z_R}$$

$$P_L = \frac{1}{2}\cdot|a|^2 - \frac{1}{2}\cdot|a|^2\cdot|\Gamma_p|^2 \qquad P_L = P_a\cdot\left(1-|\Gamma_p|^2\right) \qquad P_r = P_a\cdot|\Gamma_p|^2 = \frac{1}{2}\cdot|b|^2$$

Scattering matrix for power waves

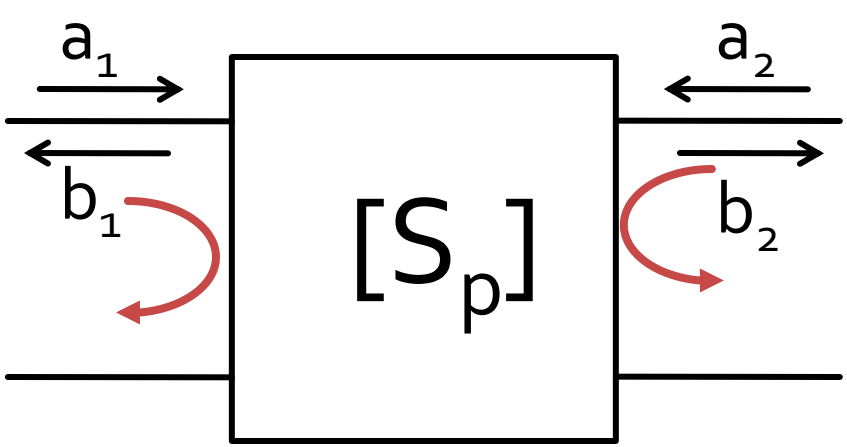

$$\begin{bmatrix} b_1 \\ b_2 \end{bmatrix} = \begin{bmatrix} S'_{11} & S'_{12} \\ S'_{21} & S'_{22} \end{bmatrix} \cdot \begin{bmatrix} a_1 \\ a_2 \end{bmatrix}$$

$$S'_{11} = \left.\frac{b_1}{a_1}\right|_{a_2=0} \qquad S'_{22} = \left.\frac{b_2}{a_2}\right|_{a_1=0}$$

Power waves

- To define the scattering matrix for power waves for an N-port network

$$[Z_R] = \begin{bmatrix} Z_{R1} & \cdots & 0 \\ \vdots & \ddots & \vdots \\ 0 & \cdots & Z_{Rn} \end{bmatrix} \qquad [F] = \begin{bmatrix} 1/2\sqrt{R_{R1}} & \cdots & 0 \\ \vdots & \ddots & \vdots \\ 0 & \cdots & 1/2\sqrt{R_{Rn}} \end{bmatrix}$$

$$[a] = [F] \cdot ([V] + [Z_R] \cdot [I])$$

$$[b] = [F] \cdot ([V] - [Z_R]^* \cdot [I])$$

$$[Z] \cdot [I] = [V]$$

Power waves for N ports

$$[b]=[F]\cdot\left([Z]-[Z_R]^*\right)\cdot\left([Z]+[Z_R]\right)^{-1}\cdot[F]^{-1}\cdot[a]$$

- The scattering matrix for power waves, $[S_p]$

$$[b]=[S_p]\cdot[a]$$

$$[S_p]=[F]\cdot\left([Z]-[Z_R]^*\right)\cdot\left([Z]+[Z_R]\right)^{-1}\cdot[F]^{-1}$$

- But: $[S]=\left([Z]-[Z_0]\right)\cdot\left([Z]+[Z_0]\right)^{-1}$

- Typically

$$Z_{0i}=Z_{Ri}=R_0,\forall i$$

$$R_0=50\Omega$$

$$\boxed{[S_p]\equiv[S]}$$

- **they coincide!!!**

Scattering matrix – S

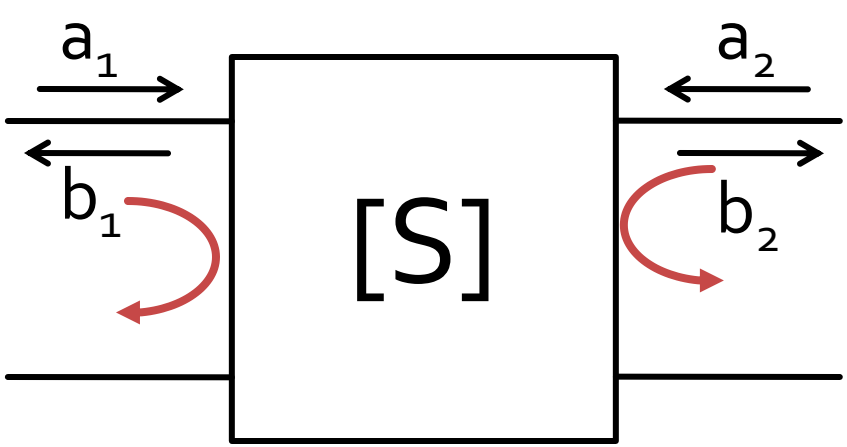

$$\begin{bmatrix} b_1 \\ b_2 \end{bmatrix} = \begin{bmatrix} S_{11} & S_{12} \\ S_{21} & S_{22} \end{bmatrix} \cdot \begin{bmatrix} a_1 \\ a_2 \end{bmatrix}$$

$$S_{11} = \left.\frac{b_1}{a_1}\right|_{a_2=0} \qquad S_{22} = \left.\frac{b_2}{a_2}\right|_{a_1=0}$$

- S_{11} and S_{22} are reflection coefficients at ports 1 and 2 when the other port is matched

Scattering matrix – S

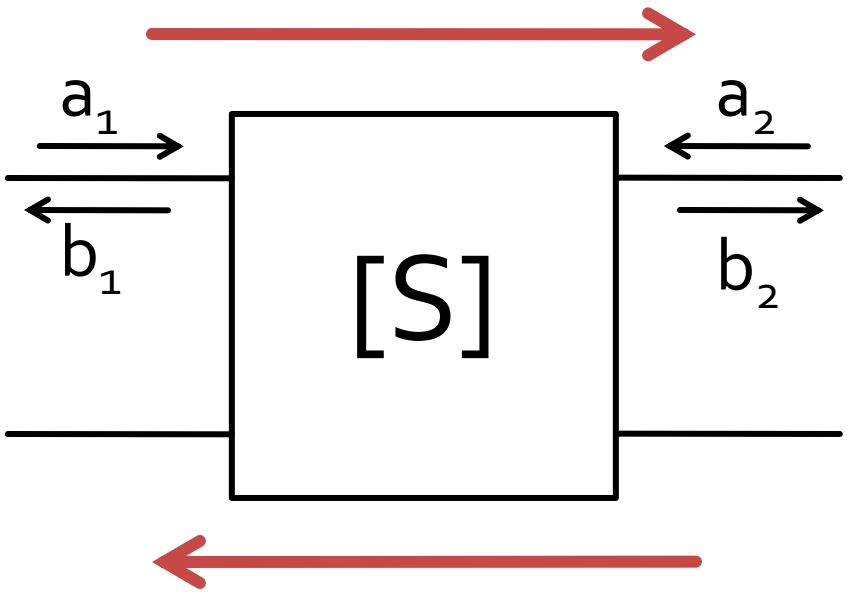

$$\begin{bmatrix} b_1 \\ b_2 \end{bmatrix} = \begin{bmatrix} S_{11} & S_{12} \\ S_{21} & S_{22} \end{bmatrix} \cdot \begin{bmatrix} a_1 \\ a_2 \end{bmatrix}$$

$$S_{21} = \left.\frac{b_2}{a_1}\right|_{a_2=0} \qquad S_{12} = \left.\frac{b_1}{a_2}\right|_{a_1=0}$$

- S_{21} si S_{12} are signal amplitude gain when the other port is matched

Scattering matrix – S

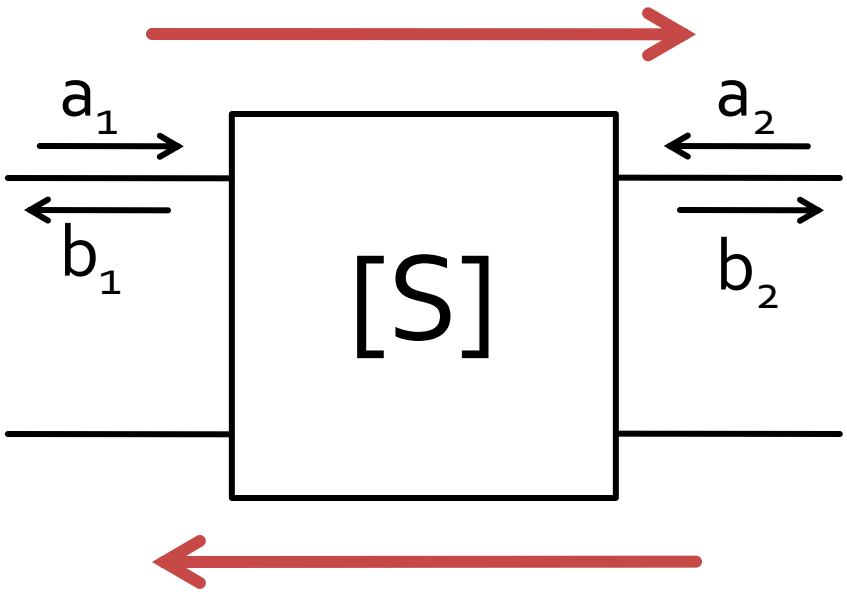

$$\begin{bmatrix} b_1 \\ b_2 \end{bmatrix} = \begin{bmatrix} S_{11} & S_{12} \\ S_{21} & S_{22} \end{bmatrix} \cdot \begin{bmatrix} a_1 \\ a_2 \end{bmatrix}$$

$$|S_{21}|^2 = \frac{Power\ in\ Z_0\ load}{Power\ \ from\ Z_0\ source}$$

- a,b
  - information about signal power **AND** signal phase
- S_{ij}
  - network effect (gain) over signal power **including** phase information

Measuring S parameters - VNA

- Vector Network Analyzer

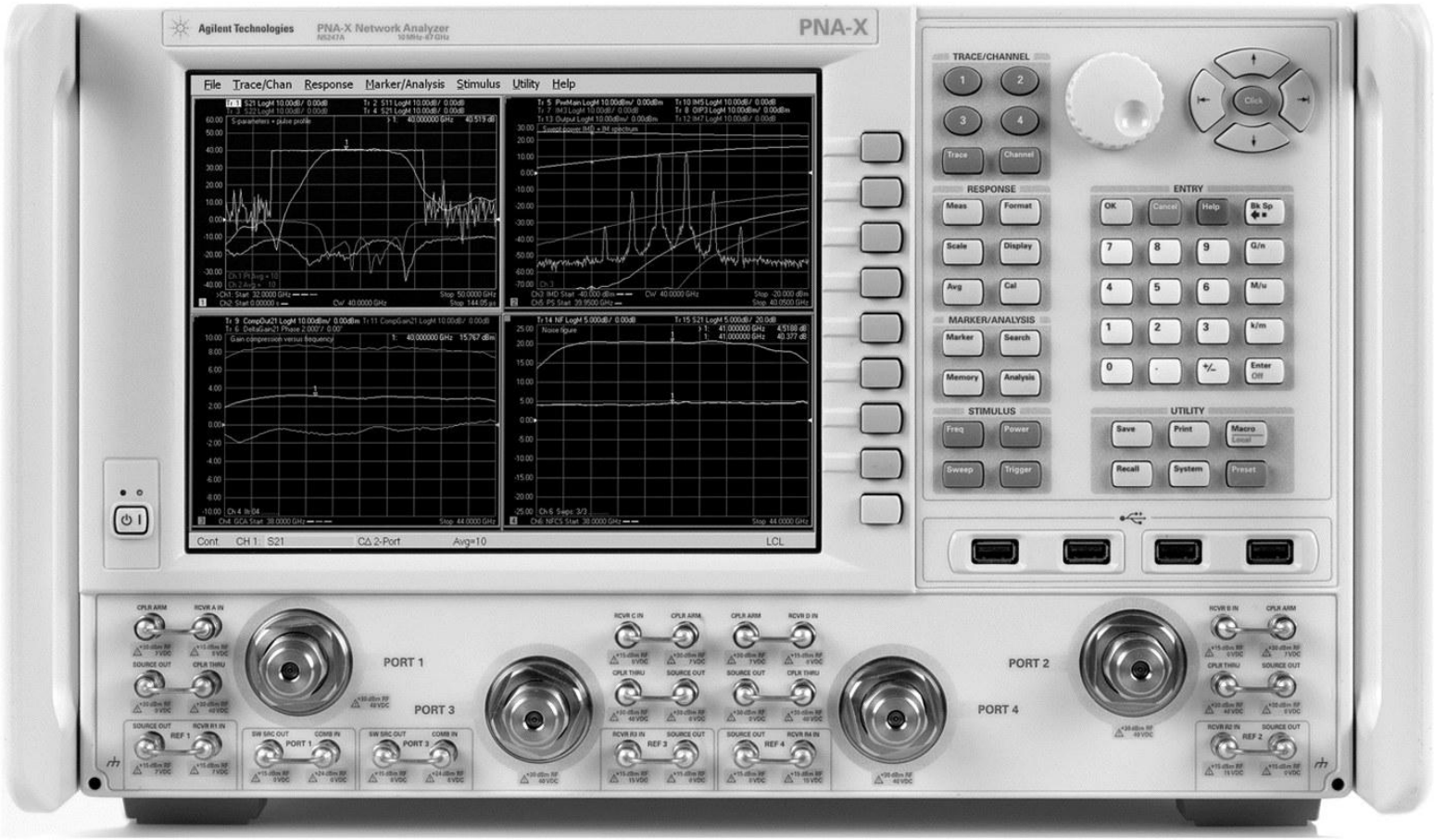

Figure 4.7
Courtesy of Agilent Technologies

Relation between two port S parameters and ABCD parameters

$$A = \sqrt{\frac{Z_{01}}{Z_{02}}}\frac{\left(1+S_{11}-S_{22}-\Delta S\right)}{2S_{21}}$$

$$B = \sqrt{Z_{01}Z_{02}}\frac{\left(1+S_{11}+S_{22}+\Delta S\right)}{2S_{21}}$$

$$C = \frac{1}{\sqrt{Z_{01}Z_{02}}}\frac{1-S_{11}-S_{22}+\Delta S}{2S_{21}}$$

$$D = \sqrt{\frac{Z_{02}}{Z_{01}}}\frac{1-S_{11}+S_{22}-\Delta S}{2S_{21}}$$

$$\Delta S = S_{11}S_{22} - S_{12}S_{21}$$

$$S_{11} = \frac{AZ_{02}+B-CZ_{01}Z_{02}-DZ_{01}}{AZ_{02}+B+CZ_{01}Z_{02}+DZ_{01}}$$

$$S_{12} = \frac{2(AD-BC)\sqrt{Z_{01}Z_{02}}}{AZ_{02}+B+CZ_{01}Z_{02}+DZ_{01}}$$

$$S_{21} = \frac{2\sqrt{Z_{01}Z_{02}}}{AZ_{02}+B+CZ_{01}Z_{02}+DZ_{01}}$$

$$S_{22} = \frac{-AZ_{02}+B-CZ_{01}Z_{02}+DZ_{01}}{AZ_{02}+B+CZ_{01}Z_{02}+DZ_{01}}$$

Even/Odd Mode Analysis

Even/Odd Mode Analysis

- useful method, necessary even for multiple ports
- example, resistors, two port circuitcircuit

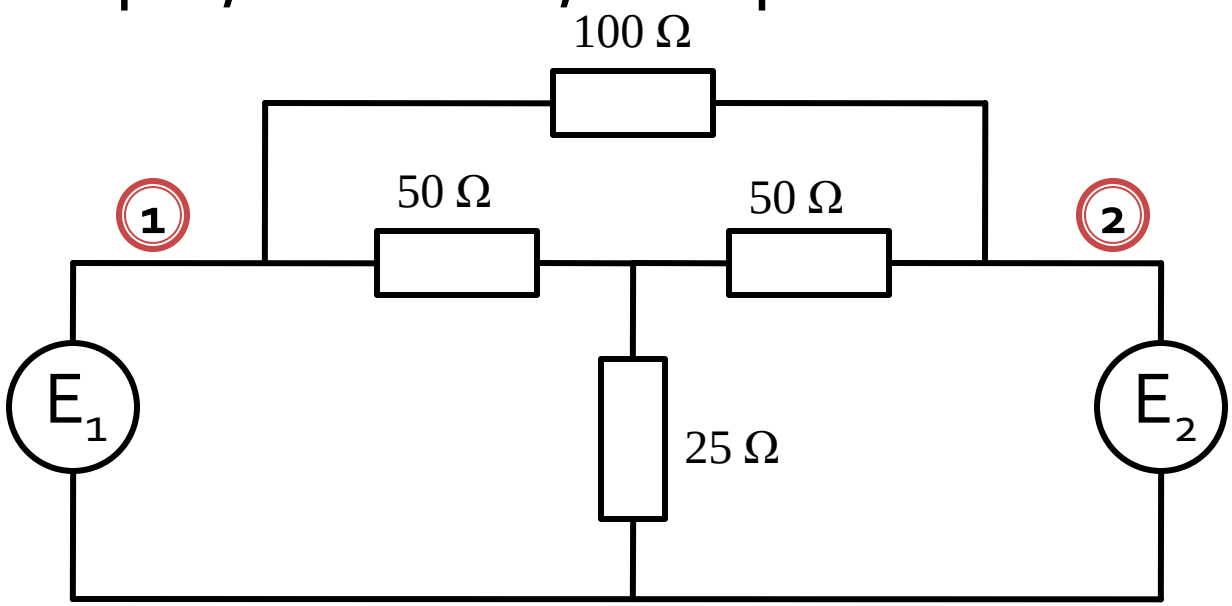

Even/Odd Mode Analysis

- assume we want to compute Y_{11}
- $E_2 = 0$

$$Y_{11} = \left.\frac{I_1}{V_1}\right|_{V_2=0}$$

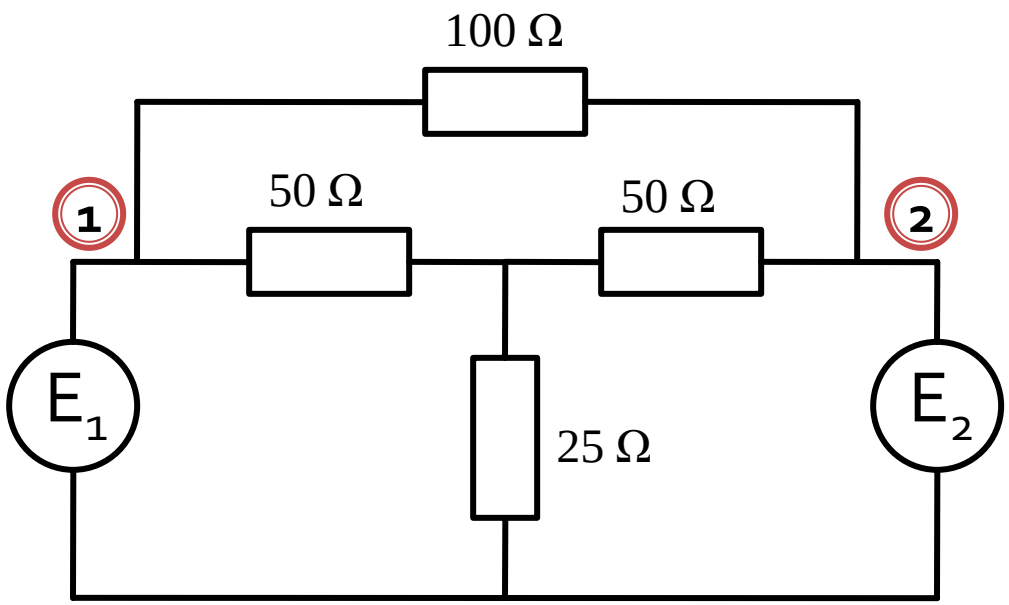

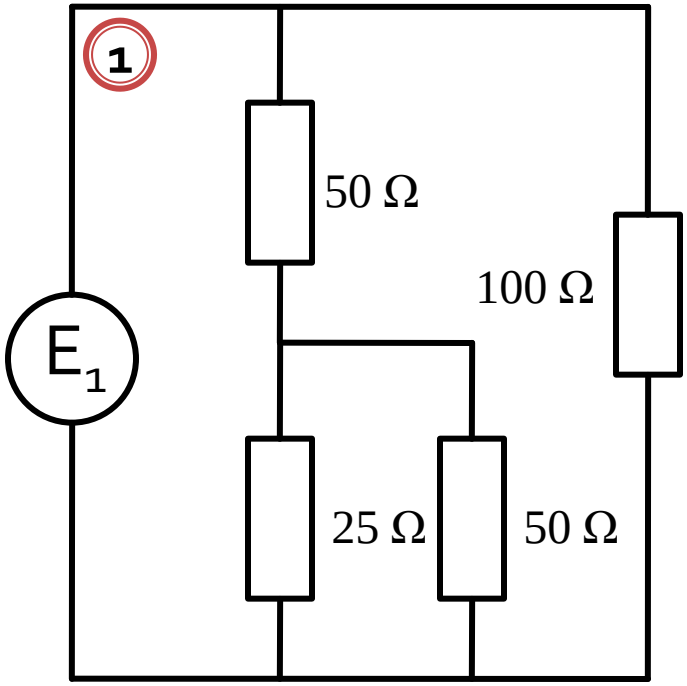

$$R_{ech} = 100\Omega \,||\, (50\Omega + 25\Omega \,||\, 50\Omega) =$$
$$= 100\Omega \,||\, (50\Omega + 16.67\Omega) = 100\Omega \,||\, 66.67\Omega = 40\Omega$$

$$Y_{11} = \left.\frac{I_1}{V_1}\right|_{V_2=0} = 0.025S$$

Even/Odd Mode Analysis

- Even/Odd mode analysis benefit from the existence of symmetry planes in the circuit
  - existing or
  - created (forced)

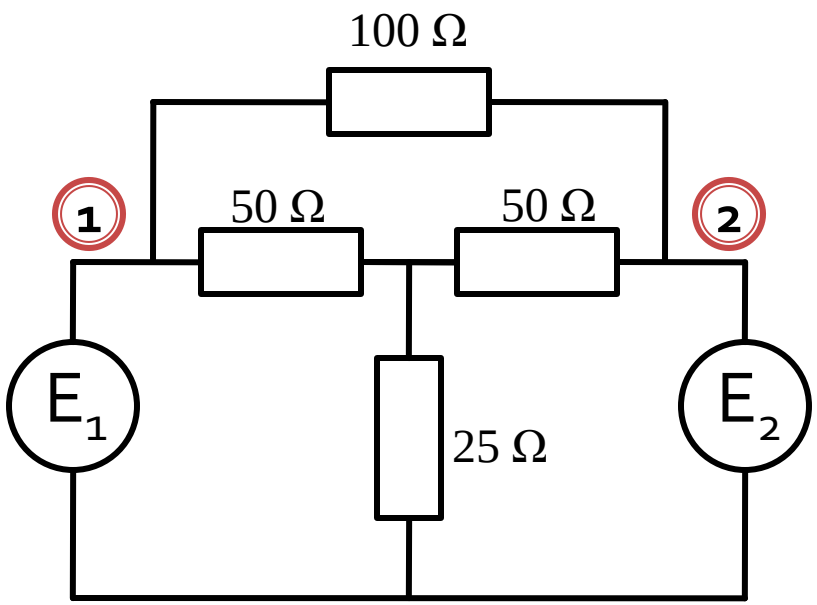

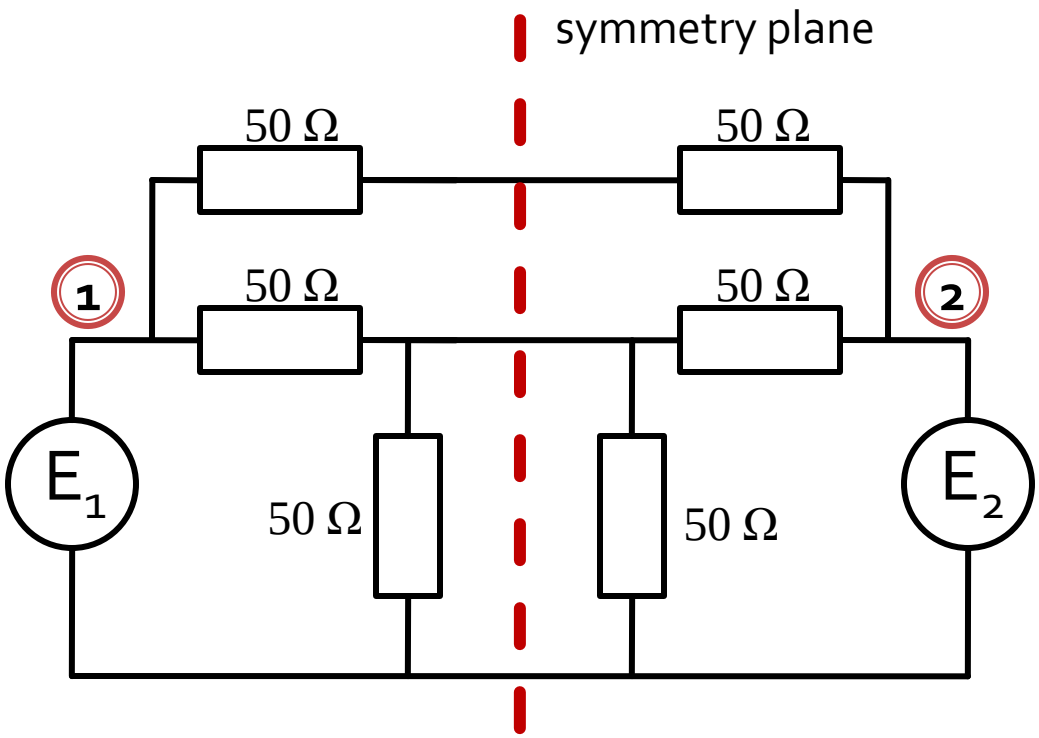

Even/Odd Mode Analysis

- when exciting the ports with symmetric/anti-symmetric sources the symmetry planes are transformed into:
  - open circuit
  - virtual ground

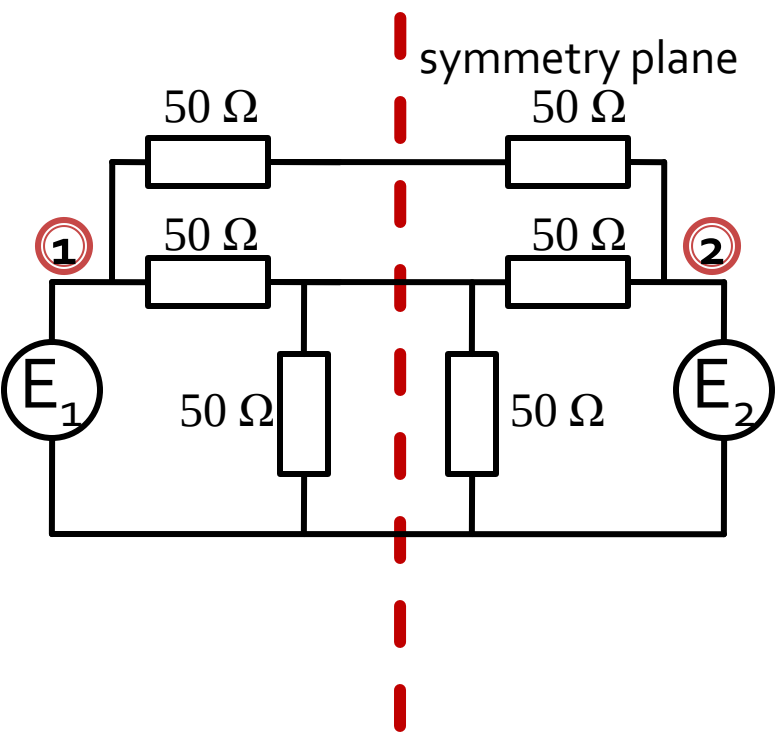

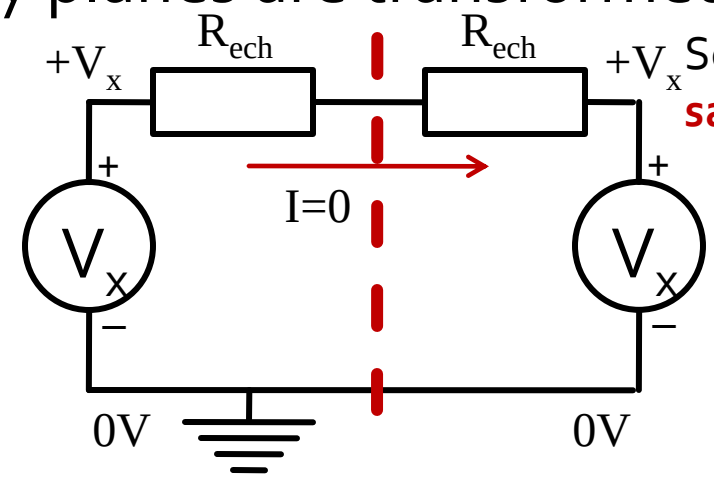

Sources have the **same** polarity

$$I = 0, \forall V_x$$

symmetry plane **open circuit**

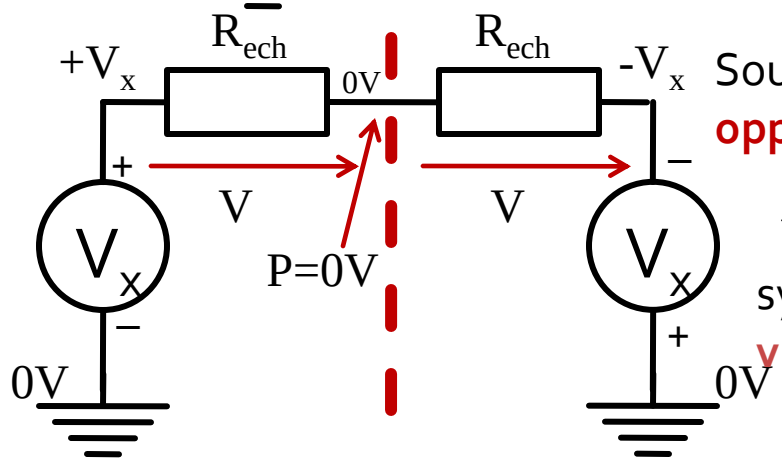

Sources have **opposite** polarities

$$P = 0, \forall V_x$$

symmetry plane **virtual ground**

Even/Odd Mode Analysis

- the combination of any two sources is equivalent for linear circuits with the superposition of:
  - a symmetric source and
  - a anti-symmetric source

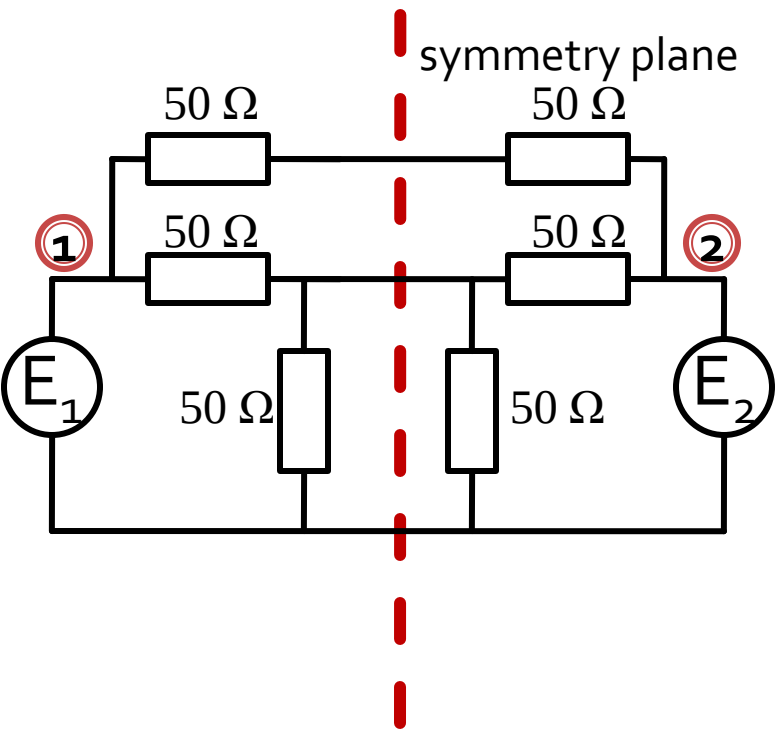

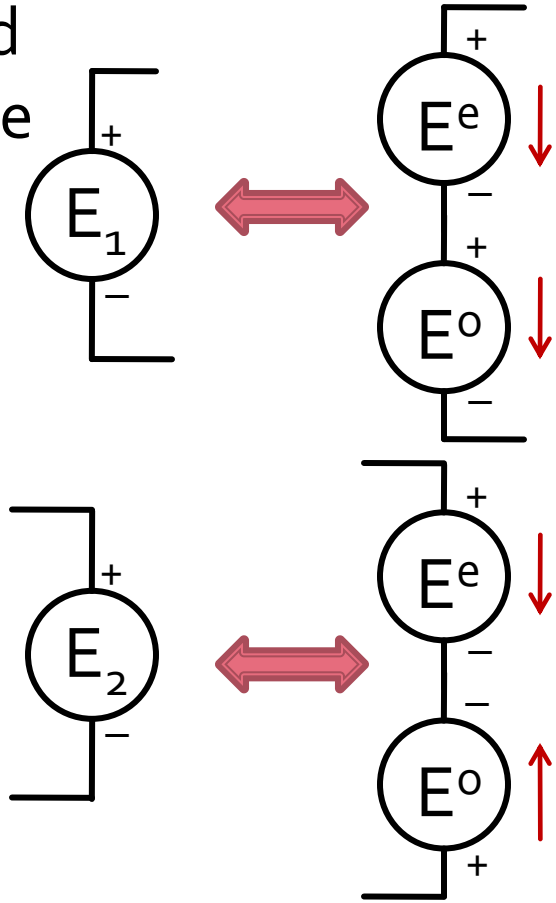

$$E_1 = E^e + E^o$$

$$E_2 = E^e - E^o$$

$$E^e = \frac{E_1 + E_2}{2}$$

$$E^o = \frac{E_1 - E_2}{2}$$

Even/Odd Mode Analysis

- In linear circuits the **superposition principle** is always true
  - the response caused by two or more stimuli is the sum of the responses that would have been caused by each stimulus individually

Response (Source1 + Source2) =

= Response (Source1) + Response (Source2)

Response(ODD + EVEN) = Response (ODD) + Response (EVEN)

We can benefit from existing symmetries !!

Even/Odd Mode Analysis

- example

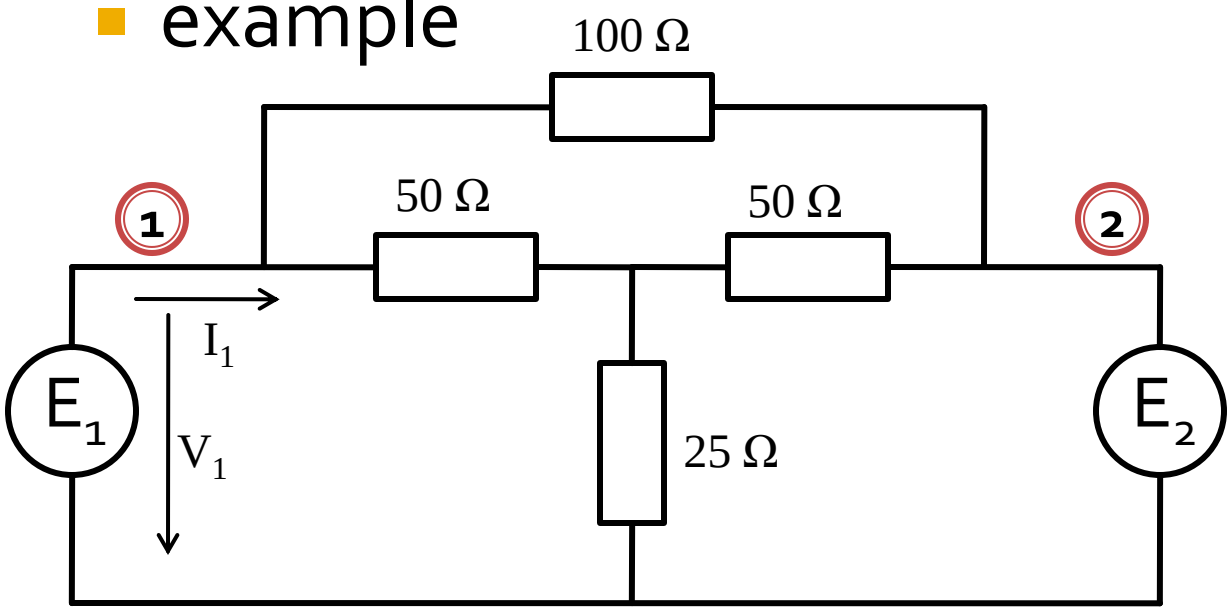

$$Y_{11} = \left.\frac{I_1}{V_1}\right|_{V_2=0}$$

$$V_2 \equiv E_2 = 0 \Rightarrow \quad E^e = \frac{E_1}{2}, \quad E^o = \frac{E_1}{2}$$

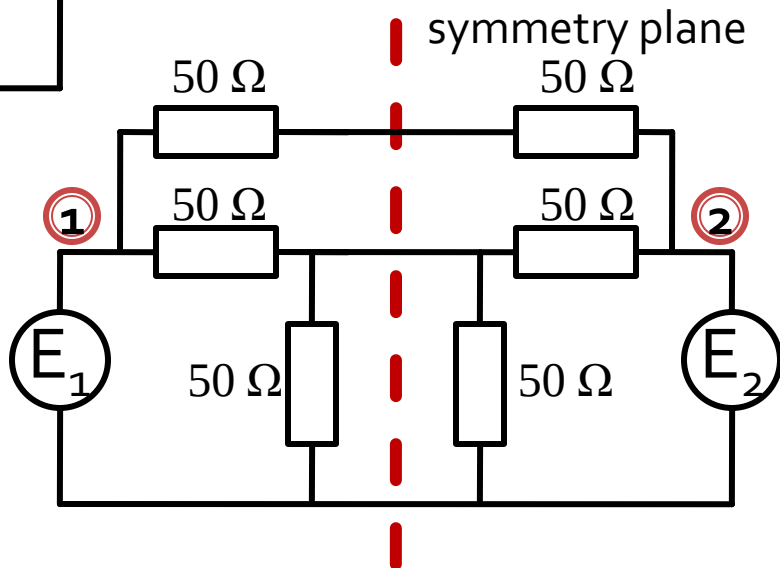

Even/Odd Mode Analysis

- Even/Odd mode analysis

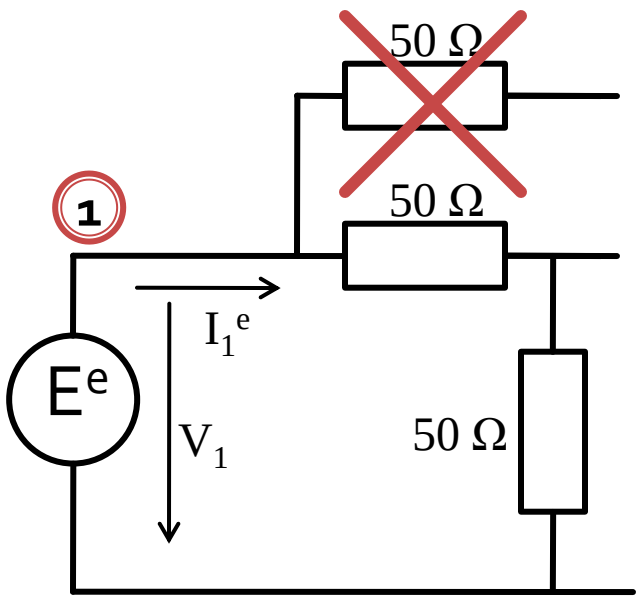

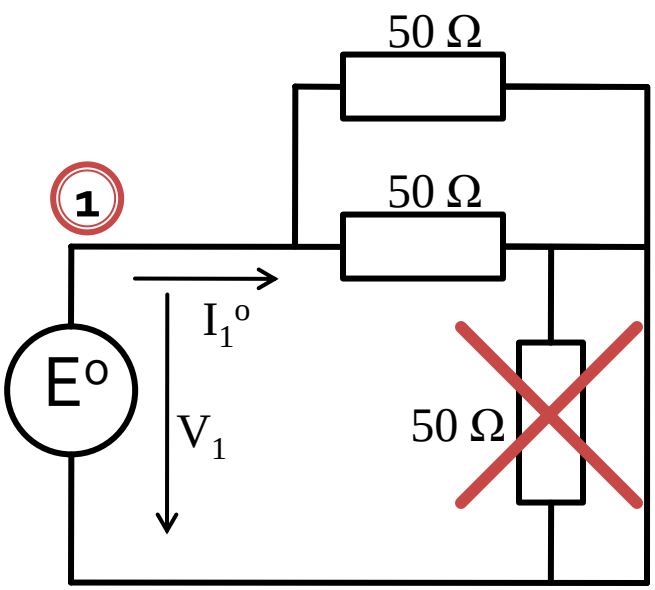

$$R_{ech}^{e} = 50\Omega + 50\Omega = 100\Omega$$

$$I_1^e = \frac{E^e}{R_{ech}^e} = \frac{E_1/2}{100\Omega} = \frac{E_1}{200\Omega}$$

EVEN → symmetry plane **open circuit**

$$R_{ech}^{o} = 50\Omega \,||\, 50\Omega = 25\Omega$$

$$I_1^o = \frac{E^o}{R_{ech}^o} = \frac{E_1/2}{25\Omega} = \frac{E_1}{50\Omega}$$

ODD → symmetry plane **virtual ground**

Even/Odd Mode Analysis

- superposition principle

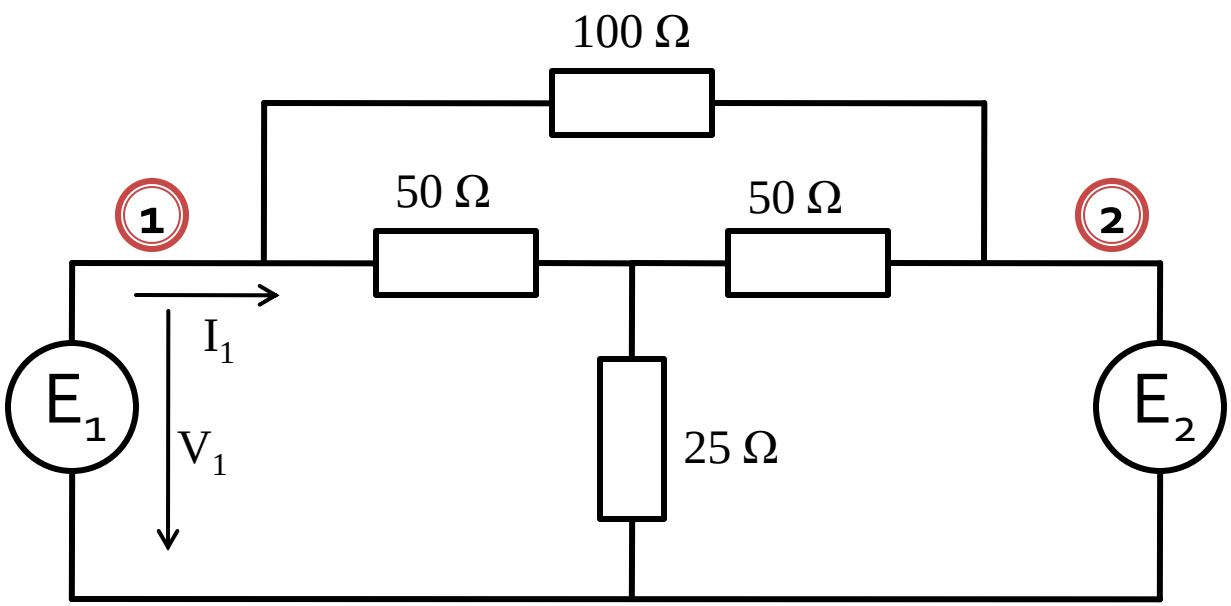

$$I_1 = I_1^e + I_1^o$$

$$V_1 = V_1^e + V_1^o$$

$$I_1 = I_1^e + I_1^o = \frac{E_1}{200\Omega} + \frac{E_1}{50\Omega} = \frac{E_1}{40\Omega}$$

$$V_1 = V_1^e + V_1^o = E_1$$

$$Y_{11} = \frac{I_1}{V_1} = \frac{1}{40\Omega} = 0.025S$$

Even/Odd Mode Analysis

- In linear circuits we can use the superposition principle
- advantages
  - reduction of the circuit complexity
  - decrease of the number of ports (**main** advantage)

Response (ODD + EVEN) = Response (ODD) + Response (EVEN)

We can benefit from existing symmetries !!

Contact

- Microwave and Optoelectronics Laboratory
- http://rf-opto.etti.tuiasi.ro
- rdamian@etti.tuiasi.ro